TAFE NSW

Linear and switched-mode power supplies

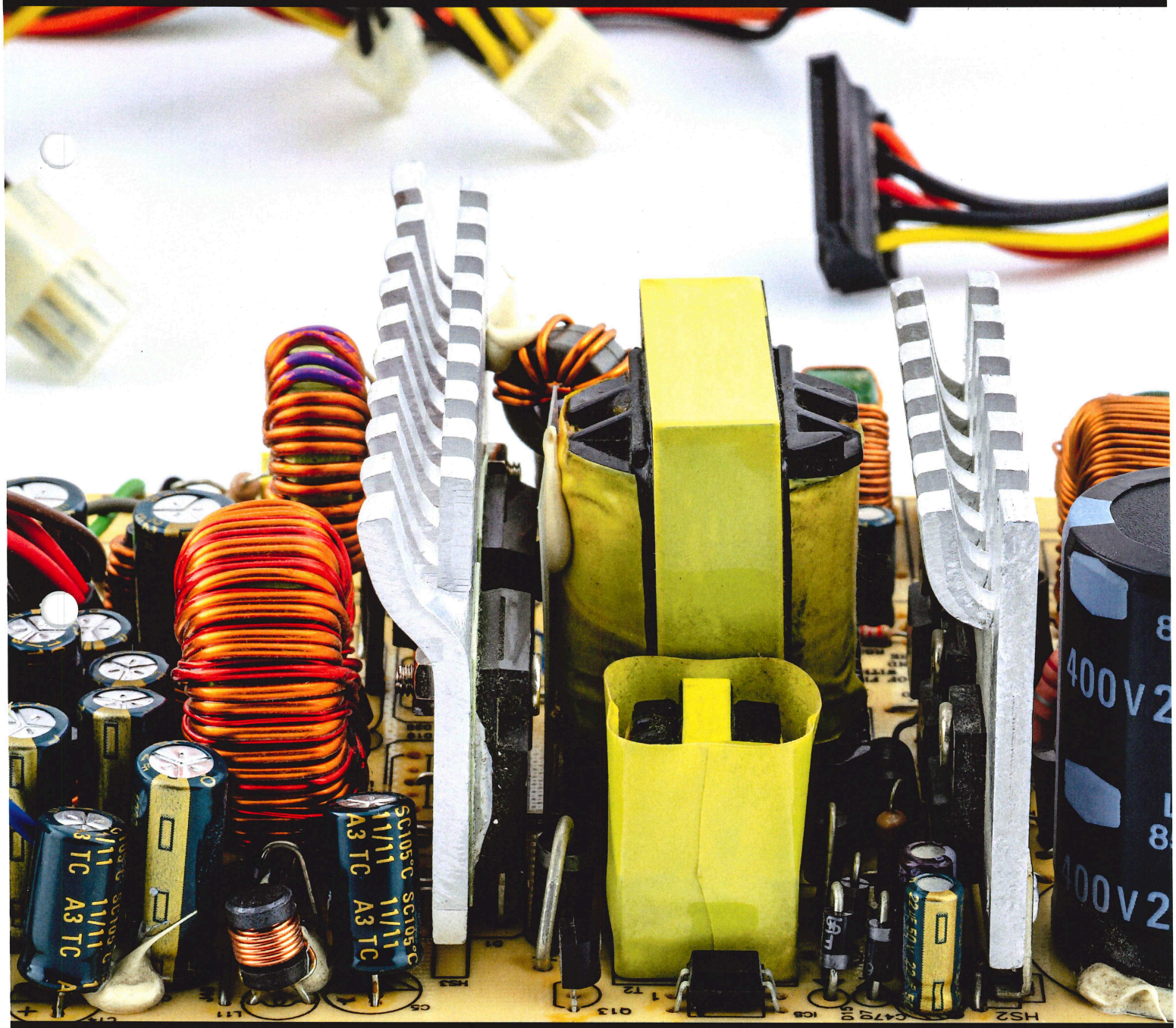

tafensw.edu.au

Learner Resource

Author: Barry Duncan
This workbook is copyright protected and must not be reproduced without written consent (except under the *fair dealing* exceptions specified in the copyright act). For more information on what constitutes fair dealing visit: www.copyright.org.au

---

Linear and Switched-mode Power Supplies

Version 2 - Jan 2023

The Electronics Section
Ultimo Campus of TAFE NSW
Mary Anne St
Ultimo NSW 2007

Contents

Introduction ____ I-3

Textbooks ____ I-4

Lesson organiser ____ I-5

Section 1 An introduction to discrete component regulation circuits ____ 1-1

Skill Practice 1 ____ 1-19

Review questions ____ 1-25

Section 2 Fault-finding the voltage divider biased BJT regulator ____ 2-1

Skill Practice 2 ____ 2-13

Review questions ____ 2-23

Section 3 Series regulator circuits with closed-loop control using BJT error amp. ____ 3-1

Skill Practice 3 ____ 3-41

Review questions ____ 3-57

Section 4 Series regulator circuits with closed-loop control using op amp error amp. ____ 4-1

Skill Practice 4 ____ 4-35

Review questions ____ 4-43

Section 5 Protection circuits ____ 5-1

Skill Practice 5 ____ 5-19

Review questions ____ 5-23

Section 6 An introduction to DC-DC converters ____ 6-1

Skill Practice 6 ____ 6-21

Review questions ____ 6-31

Section 7 DC-DC Converters with closed-loop control using op amp error amp. ____ 7-1

Skill Practice 7 ____ 7-21

Review questions ____ 7-29

Section 8 Switched-mode power supplies ____ 8-1

Review questions ____ 8-21

Copyright: Not to be reproduced without permission

Answers Section 1 ____ A-1
Section 2 ____ A-4
Section 3 ____ A-5
Section 4 ____ A-8
Section 5 ____ A-11
Section 6 ____ A-13
Section 7 ____ A-17
Section 8 ____ A-19

Introduction

This workbook has been written to help students satisfy the assessment requirements for the following Units:

- UEEEC0028 - Fault find and repair complex power supplies

More information about electrotechnology training packages and the above Units can be found at www.training.gov.au/home/tga. Type the course/unit number in the "Quick search" and press return.

 Copyright: Not to be reproduced without permission

Textbooks

The following textbooks can be used to supplement the notes in this workbook. Most (if not all) of these books are available from the library in Building D.

- Crecraft & Gergely, 2002, *Analog Electronics*, Newnes
- Davis, 1996, *Understanding DC Power Supplies and Oscillators*, Prentice Hall
- Edwards & Myer, 1994, *Electronics; a basic course*, McGraw Hill
- Fiore, 2001, *Op Amps & Linear Integrated Circuits*, Delmar
- Floyd, 1999, *Electronic Devices,* 5th Edition, Prentice Hall
- Hazen, 1991, *Exploring Electronic Devices*, Saunders Publishing
- Paynter, 1991, *Introductory Electronic Devices & Circuits*, Prentice Hall

Lesson organiser

Lesson	Section	Activity
Before starting (ideally)	Required reading	■ Workplace Health & Safety ■ Using sustainable energy practices ■ Communication and documentation ■ Test and measurement devices ■ Inductance and transformer theory ■ Diode and semiconductor basics
1	1	■ Series regulation including its advantages and disadvantages ■ The voltage divider biased BJT as a series regulator circuit ■ Practise measuring load voltage and current for the output of a voltage divider biased BJT as a series regulator
2	2	■ Revision ■ Component faults ■ Fault-finding the voltage divider biased BJT as a series regulator faults ■ Practise measuring potential differences around the circuit of a voltage divider biased BJT as a series regulator with simulated faults
3	3	■ The series regulator (fixed and adjustable output) with closed-loop control using BJT error amplification ■ Generic block diagram of series regulators with error amplification ■ Fault-finding a series regulator circuit with closed-loop control (BJT error amplification) ■ Practise fault-finding a series regulator circuit with closed-loop control (BJT error amplification)
4	4	■ The series regulator (fixed and adjustable output) with closed-loop control using op amp error amplification ■ Fault-finding a series regulator circuit with closed-loop control (op amp error amplification). ■ Practise measuring potential differences around the circuit of a series regulator with closed-loop control using op amp error amplification with simulated faults
5	5	■ Protection circuits (crowbar and current-limiting) ■ Practise measuring load voltage, load current and potential differences around a series regulator with current limiting
6	6	■ DC-DC converters (aka switching regulators) including their efficiency ■ DC-DC converter configurations ■ Practise measuring potential differences and signals around a simple DC-DC converter
7	7	■ DC-DC converters with closed-loop control using op amp error amplification ■ Generic block diagram of DC-DC converters with error amplification ■ Practise measuring output voltage and load current for a DC-DC converter with closed-loop control implemented using the MC34063 IC
8	8	■ Switched-mode power supplies (aka offline switching regulators) ■ Revision
9	■ **Assessments - Refer to UAG for details**	

Copyright: Not to be reproduced without permission

Student notes

Required reading

Purpose

These notes are provided to support your revision on aspects of this Unit that have been taught before in other Units (typically more than once) and will not be taught again but may be assessed.

This issue is explained in more detail on the following pages.

 Copyright: Not to be reproduced without permission

Introduction

As you probably know, *units of competence* that make up qualifications in the Electrotechnology Training Package (like CIII Electronics and Communications) prescribe what must be taught and assessed.

This is done using *elements of competence* together with *performance criteria* for each element. More detail on these is provided in the *assessment requirements* for the unit using two lists: one is the list of *performance evidence*; and the other is the list of *knowledge evidence*.

There are some performance criteria (together with performance evidence and/or knowledge evidence in the assessment requirements) that appear in many units and these include items on the following topics:

- work health and safety (WHS)
- using sustainable energy practices
- the appropriate use and completion of documentation
- appropriate communication with supervisors, customers and other stakeholders.

It makes sense that these performance criteria are common to multiple units because, taking WHS as an example, it's not reasonable to claim competence when the work was completed successfully but in an unsafe way.

As well as the topics listed above, there are performance criteria and/or assessment requirements related to electrical/electronic theory and practice that appear in two or more units. This occurs when the people who have developed the training package (not TAFE NSW) have decided that it's appropriate that they should do so. An example of this for UEEEC0028 is the requirement for you to demonstrate knowledge of inductance and transformer theory (among other topics) which you have previously learnt about when undertaking EC0074 (formerly UEENEEH114A).

Importantly, where all these topics have been comprehensively taught before, it is usually unnecessary to teach them a second or third time. That said, we are still expected to ask you to provide knowledge evidence and/or performance evidence possibly by answering questions on these topics in the theory test and/or demonstrating your skills on these topics during the practical tests.

For this reason, the following information and/or notes are provided for you to read and use to ensure that you can satisfy the assessment requirements for this unit.

Work health and safety (WHS)

When you undertake the in-class simulated workplace tasks and/or the practical test for this unit (EC0028), you're expected to demonstrate your knowledge of, and demonstrate your ability to carry out, the following performance criteria related to WHS and their associated knowledge evidence and performance evidence:

1.1 - Work health and safety (WHS) requirements and workplace procedures for relevant work area are identified, obtained and applied (UEECD0007 references: 1.2, 1.3 & 1.4)

1.2 - WHS risk control measures are applied in accordance with workplace procedures prior to commencing work (UEECD0007 references: 1.2, 1.3 & 1.4)

2.1 - WHS risk control measures and procedures are applied (UEECD0007 references: 1.1, 1.6, 2.1 and 2.4)

2.2 - Need to test and measure live work is determined in accordance with WHS requirements and workplace procedures (UEECD0007 references: 1.2, 1.3 & 1.4)

3.1 - WHS risk control measures and workplace procedures are applied (UEECD0007 references: 3.1 to 3.4)

3.2 - Worksite is cleaned and made safe in accordance with workplace procedures (UEECD0007 references: 2.6)

Source: https://training.gov.au/Training/Details/UEEEC0028

As you may already be aware:

- WHS is taught and assessed in a dedicated unit, CD0007 (formerly E101A)
- CD0007 or E101A is a pre-requisite unit for undertaking EC0028 (that is, you must have successfully completed CD0007 or E101A to be able to undertake EC0028)
- The performance criteria listed above are underpinned by, and/or are identical in substance to, the performance criteria in CD0007 and E101A indicated in brackets above
- You have successfully met the assessment requirements for at least one or more of the following units which also include the performance criteria listed above: EC0066/H113A, EC0067/H139A, EC0069/H112A and EC0074/H114A.

Importantly, the knowledge and skills needed to perform these performance criteria are identical to those needed to repair resonance, amplifier and digital circuits operated from mains. This means that you already have the ability to demonstrate your knowledge of, and demonstrate your ability to carry out, these performance criteria in the context of this unit.

However, if your unsure and would like to read more information about these performance criteria, please refer to your learner resources for CD0007/E101A that specifically address them.

 Copyright: Not to be reproduced without permission

Note: If you have not successfully completed CD0007 or E101A, please bring this to the urgent attention of the teacher before undertaking any of the simulated workplace tasks.

Using sustainable energy practices

When you undertake the in-class simulated workplace tasks and/or the practical test for this unit (EC0028), you're expected to demonstrate your knowledge of, and demonstrate your ability to carry out, the following performance criterion:

2.11 - Fault-finding and repair activities are carried out efficiently without waste of materials, damage to apparatus, the surrounding environment, or services applying sustainable energy practices.

This includes knowing about sustainable energy principles and practices.

Sustainability is a much used word now that describes growing global response to the short and long term negative effects on the planet of certain human activities, particularly in relation to climate change and pollution. It's accepted that, without drastic action, both problems will likely make living on this planet more difficult (due to extreme weather and toxic environments) that, in turn, risk causing drought, famine, war and the failure of democratic governments and even whole nation states.

R J Fuller (Deakin University, 2005) describes four principles that underpin sustainability:

- Futurity - The concern for future generations
- Environment - The concern to protect the integrity of eco-systems
- Equity - The concern for the poor and disadvantaged
- Participation - The notion that individuals can participate in decisions affecting them

An essential element of the global response to climate change is the switch to sustainable energy. Energy is said to be sustainable if it "meets the needs of the present without compromising the ability of future generations to meet their own needs." Underpinning this are the sustainable energy principles which include (but are not limited to):

- Reducing our use of non-renewable energy sources (like the fossils fuels which includes coal, gas and oil)
- Increasing our use of renewable sustainable energy sources (like solar just to name one of many)

Fuller's fourth principle is important because it means that individuals, including you, can contribute directly and indirectly to sustainable energy principles by using sustainable energy practices where possible. Direct action that can be taken includes (but is not limited to):

- Switching off equipment not in use
- Turning off lights when leaving a room with nobody in it
- Opening windows to cool rooms instead of turning on room air-conditioning
- Using natural lighting
- Minimising waste
- Recycling waste
- Using public transport to and from work
- Drinking tap water

Indirect action that can be taken, includes (but is not limited to) encouraging your employer to:

- Using more energy efficient lighting
- Using more energy efficient equipment
- Reducing (in winter) and increasing (in summer) the temperature setting of air conditioning so that to uses less energy
- Switching to using sustainably sourced and/or sustainably manufactured materials
- Switching to an SEU energy provider

With all that said, every workplace is different so what works with one may not work with another.

 Copyright: Not to be reproduced without permission

Communication and documentation

When you undertake the in-class simulated workplace tasks and/or the practical test for this unit (EC0028), you're expected to demonstrate your knowledge of, and demonstrate your ability to carry out, the following performance criteria related to workplace communication and documentation and their associated knowledge evidence and performance evidence:

1.3 - Nature of the fault is obtained from documentation or discussions with relevant person/s to determine scope of work

1.4 - Relevant person/s is consulted to ensure work is coordinated effectively with others

1.5 - Materials required for the work are determined in accordance with workplace procedures

1.6 - Tools, equipment and testing devices required to carry out the work are obtained in accordance with workplace procedures and checked for correct operation and safety.

2.3 - Apparatus is isolated, as required, in accordance with WHS requirements and workplace procedures

2.5 - Apparatus components are dismantled, as necessary, and parts stored to protect against loss or damage

2.7 - Materials required for repair work are sourced and obtained in accordance with workplace procedures

2.8 - Effectiveness of the repair is tested in accordance with workplace procedures

2-10 - Unplanned situations are dealth with safely and with approval of relevant person/s

3.3 - Justification is made in the required format for repairs to apparatus

3.4 - Work completion is documented in accordance with workplace procedures and appropriate person/s notified

The specific knowledge required to satisfy these performance criteria is specific to each workplace setting. However, the skills are generic and so are transferable between workplace settings including simulated workplace settings at TAFE NSW. This means that, when you undertake the in-class simulated workplace tasks and the practical test, you are expected to demonstrate your skills in this regard.

Importantly, while undertaking the in-class simulated workplace tasks and/or the practical test for this unit at TAFE NSW, the following applies to key terms in the performance criteria above:

- "Relevant person" refers to the class teacher
- "Others" refers to the class teacher and other students in the class
- "Materials" refers to components and training aids needed to carry out the simulated workplace tasks as described in the skill practise exercises' equipment list
- "Workplace procedures" refer to the written and verbal procedures and instructions provided by the teacher for the safe and proper conduct of skill practise exercises
- "Tools, equipment and testing devices" refers to tools and test equipment needed to carry out the simulated workplace tasks as described in the skill practise exercises' equipment list and/or mounted on the workbenches
- "Documented... in accordance with workplace procedures" refers to the requirement for students to record their measurements, other results, and answers to questions on the skill practice exercises and/or any handouts that must be submitted to the teacher.

 Copyright: Not to be reproduced without permission

The following is the procedural requirement for undertaking the simulated workplace tasks that form the basis of skill practise exercises.

- Students must have permission from the teacher to start every skill practice exercise.
- Students must work individually on every skill practise exercise, or in pairs with the permission of the teacher (but never more than two per group).
- Students must perform a WHS risk assessment at the start of every skill practice exercise to ensure the safety of themselves and others.
- Students are to bring to the attention of the teacher any hazards that they identify for which there are they cannot implement appropriate control measures.
- Students are to collect equipment from the trolley in a safe and orderly manner having respect for the reasonable needs of other students.
- Students are to follow the written instructions in every skill practice exercises in correct order and in total including any qualifying notes.
- Students are expected to record their measurements, other results and answers to questions for every skill practice exercise and/or any handouts that must be submitted to the teacher.
- Students are expected to call the teacher to check their work when instructions direct them to do so.
- Students are expected to retake any measurements and reattempt and/or correct any of their answers to questions when reasonably directed to do so by the teacher.
- Students are not to return their equipment to the trolley or leave **until** they have completed the skill practice exercise and their work has been checked by the teacher.
- Students are expected to submit their work to the teacher by the due date when required to do so.
- At the completion of every skill practice exercise, students are expected to return all equipment to the trolley tidily (unless directed otherwise by the teacher) and ensure that the workspace is left cleaned and safe.
- Students are to bring to the attention of the teacher any faulty test equipment, tools and components.

Test equipment

When you undertake the in-class simulated workplace tasks and/or the practical test for this unit (EC0028), you're expected to demonstrate your ability to:

- Select relevant test equipment and test methods
- Make and analyse measurements to verify circuit operation
- Determine live testing /measurement requirements
- Isolate circuits

If your unsure that you are able to demonstrate your ability carry these tasks out, the following notes have been provided here for your convenience for you to read.

Types of test and measurement devices

Three types of test equipment commonly used when fault-finding electronics equipment include:

- Multimeters
- Signal generators
- Oscilloscopes

Of these, two are used when fault-finding linear and switched-mode power supplies: multimeters and oscilloscopes.

Multimeters are three (and even more) instruments in one consisting of at least:

- a voltmeter for measuring potential differences
- an ammeter for measuring circuit current
- an ohmmeter for measuring the resistance of components, particularly resistors.

Voltmeters are useful when fault-finding all power supplies because they can be used to measure average and effective potential differences (also called voltages) around the circuit for comparison to predicted values to determine whether there is a fault. Then, if a circuit is found to be faulty, the difference between the measured and predicted voltages can be used to determine what component is faulty and possibly even predict what is wrong with it.

Ammeters are useful when fault-finding all power supplies because they can be used to measure the effective load current to determine whether the load is drawing too much current and whether the power supply's full-load current performance matches the specification.

Ohmmeters are useful when fault-finding DC power supplies because they can be used to measure the resistance of suspect components like resistors and to identify short-circuit component terminals. They can also be used for cold-testing of circuits when looking for short-circuits.

 Copyright: Not to be reproduced without permission

Oscilloscopes are effectively voltmeters that also show the shape of the voltage. When observing AC voltages, the oscilloscope can also measure the period and frequency (either indirectly or directly) of the voltage.

Oscilloscope are useful when fault-finding all power supplies because they can be used to determine the size and frequency of the ripple voltage on the output of the unregulated power supply stage. They can also be used to examine key voltages around the circuit of switched-mode power supplies. These can be compared to predicted values to determine whether the power supply is faulty and possibly what component is faulty.

Dummy loads

A dummy load is another piece of test equipment that you have probably used before though you may not have heard of this term. It's a fixed resistor or variable resistor that is connected to the output of a circuit like an amplifier or power supply in place of the device or circuit that is usually connected to their output. For amplifiers, this allows the technician to perform tests without having to listen to the test signal because the dummy load replaces the speaker. For power supplies, the dummy load is used to set the amount of current drawn from the power supply to test performance attributes like *load regulation* and *full-load current*. Dummy loads can also be essential to fault-finding switched-mode power supplies because many are designed only to operate with a load connected.

Making and analysing measurements

When fault-finding power supplies, the process involves making voltage, current or resistance measurements and comparing them to the values that they should be. These can either be predicted or provided by the manufacturer.

When measuring potential differences, the voltmeter is connected to the circuit in parallel with the component whose potential difference you want to measure. This is shown in Figure 1 below using a simple series circuit consisting of a resistor and a lamp with the meter measuring the potential difference across the resistor. The meter is shown both as a drawing (on the left) and as a schematic symbol (on the right).

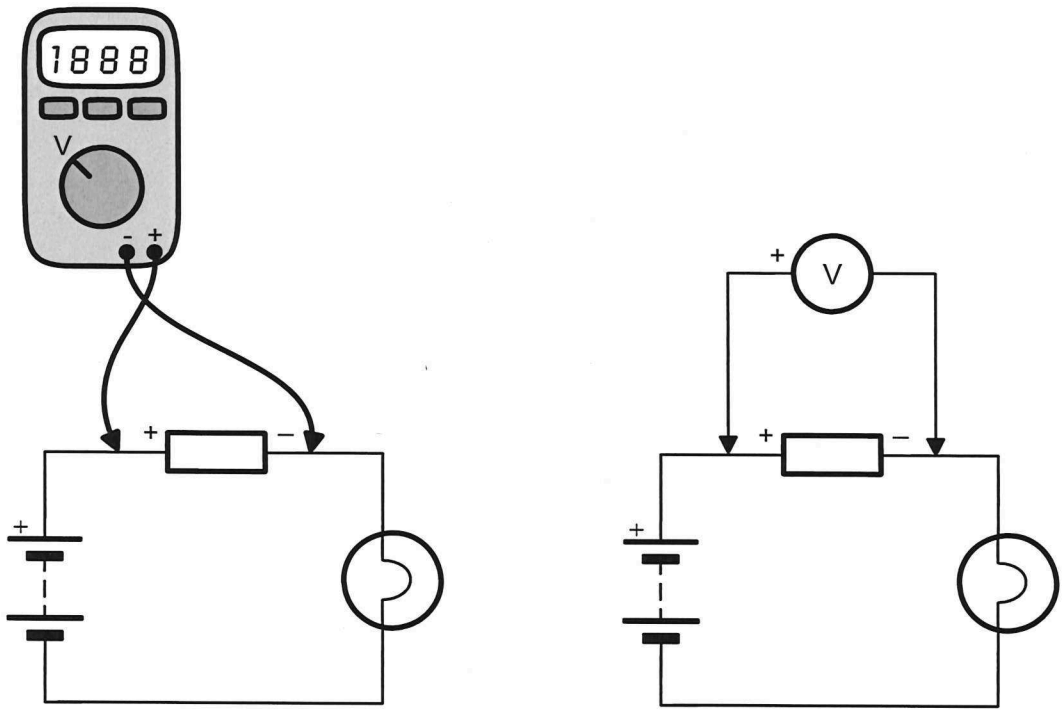

Figure 1

Notice that the voltmeter's positive probe must be connected to the potential difference's positive side. So, you must determine which side of the component is positive before you connect the meter. The simple rule for this involves recalling that, for all components except the EMF, the side of the potential difference that is positive is the side that conventional current enters the component.

Care must be taken when connecting the meter to the circuit so that you don't actually short two points of the circuit together. This is especially a risk when measuring the voltage on the leads of transistors and the pins of integrated circuits because they're so close together.

 Copyright: Not to be reproduced without permission

When measuring currents, the ammeter is connected to the circuit in series with the component whose current you want to measure. This is shown in Figure 2 below using a simple series circuit consisting of a resistor and a lamp with the meter measuring the current through the resistor (which is also the current through the lamp in this case because it's a series circuit). The meter is shown both as a drawing (on the left) and as a schematic symbol (on the right).

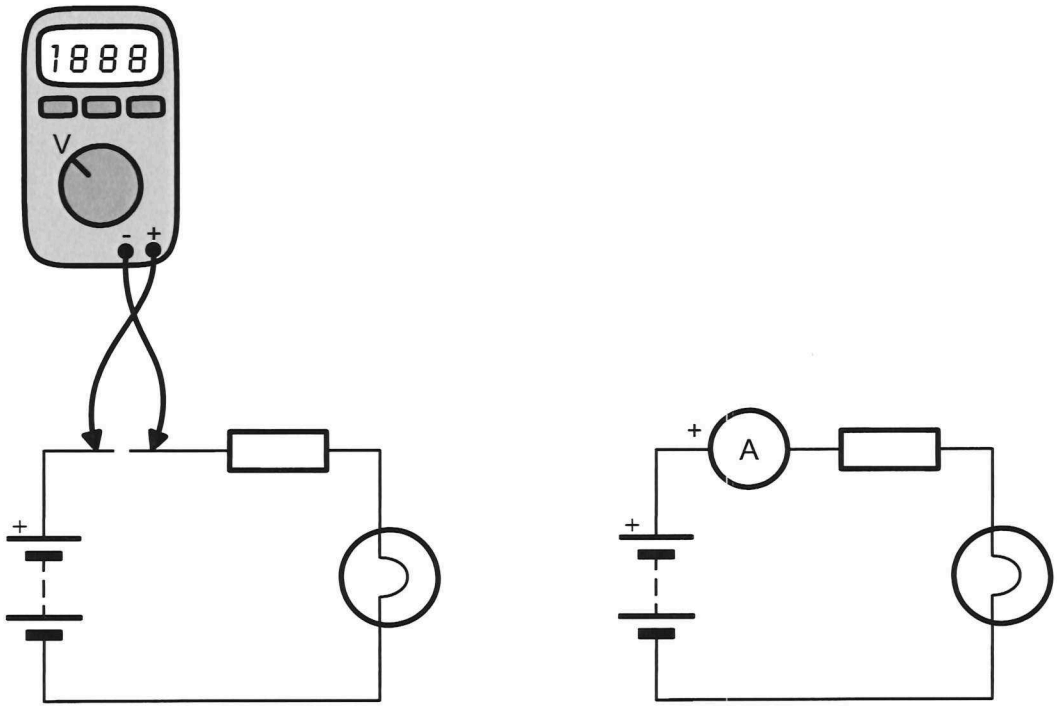

Figure 2

Notice that the circuit must be broken at some point to introduce the ammeter (an inconvenience that limits the practical measurement of current in the workplace). Notice also that the ammeter's positive probe must be connected to the point in the circuit from which the conventional current flows.

Measuring resistance is a simple matter of connecting the meter's probes across the component in any polarity as shown in Figures 3 below. Importantly though, recall that the component should be removed from the circuit before you make the measurement.

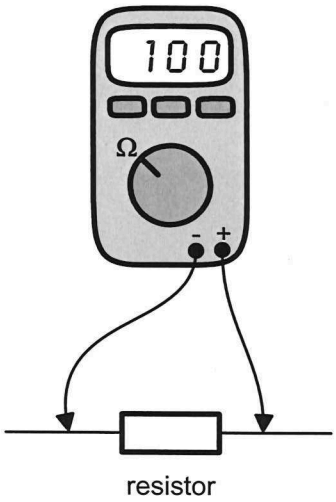

Figure 3a

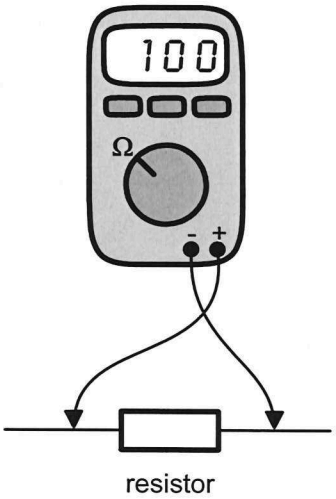

Figure 3b

Also remember that your fingers should not be touching the metal parts of the probes. If the component is out of the circuit, you're not going to get electrocuted. However, if you're touching the metal parts of both probes, the ohmmeter may show an incorrect resistance for the component because the measurement will include your bodily resistance.

 Copyright: Not to be reproduced without permission

Determining live testing/measurement requirements and isolating circuits
When using a multimeter or oscilloscope to test and measure electronics equipment, there are two important safety measures that can minimise the risk of your being fatally electrocuted.

The first involves ensuring that the equipment that you're testing or repairing (like a hi-fi or PVR) is plugged into a power point that is protected at the switchboard by a residual current device (RCD). You can check whether the building's powerpoints are RCD protected by looking inside the switchboard. Figure 1 below shows an example of what to look for.

Figure 1

Up close, RCDs look like the example in Figure 2 below and there should be at least one row of these devices in the switchboard mounted side-by-side. RCDs are easily recognised by the fact that they're switched devices and often they have an in-built test feature too.

Figure 2

RCDs have been designed expressly for the purpose of preventing people and animals from a sustained direct connection to mains which can be fatal.

If the switchboard is older it may use semi-enclosed cartridge fuses instead of RCDs and an example is shown in Figure 3 below. Importantly, being fuses, these devices are designed to protect equipment and prevent fires but they **do not** prevent people/animals from potentially fatal electrocution. You should avoid powering the equipment that you're testing/reparing from power points that are only protected at the switchboard by these fuses.

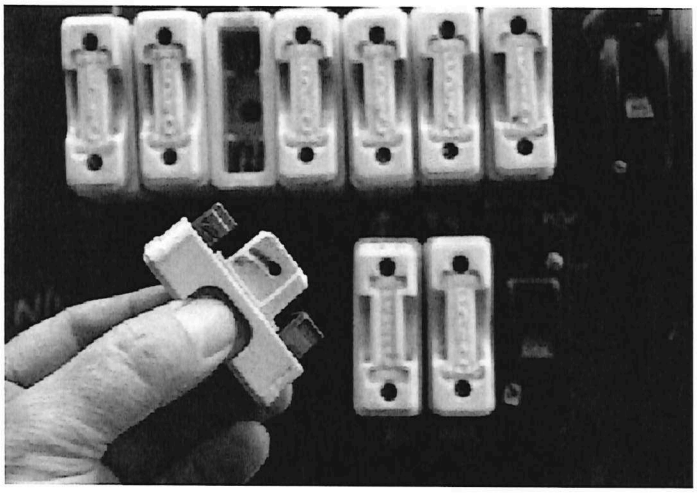

Figure 3

If you can't access the switchboard to see what's inside, or you know for certain that the power point is not RCD protected, then plug the equipment that you're testing into the powerpoint of a powerboard that is RCD protected instead. An example is shown in Figure 4 below - Notice the RCD at the left end (which includes a button for the test feature).

Figure 4

Take care when purchasing protected powerboards because there are many that offer "surge" and/or "overload" protection. While these features are useful, they don't provide protection from electrocution. Powerboards that are RCD protected will state this clearly and are usually a fair bit more expensive than simple surge and overload protected powerboards.

 Copyright: Not to be reproduced without permission

The second safety measure you must employ when connecting multimeters to live equipment, involves never doing so with your fingers touching any of the probe's metal parts. Figure 5 below shows the correct way to hold the probes. Notice that the person holds the probes behind the their slip barriers.

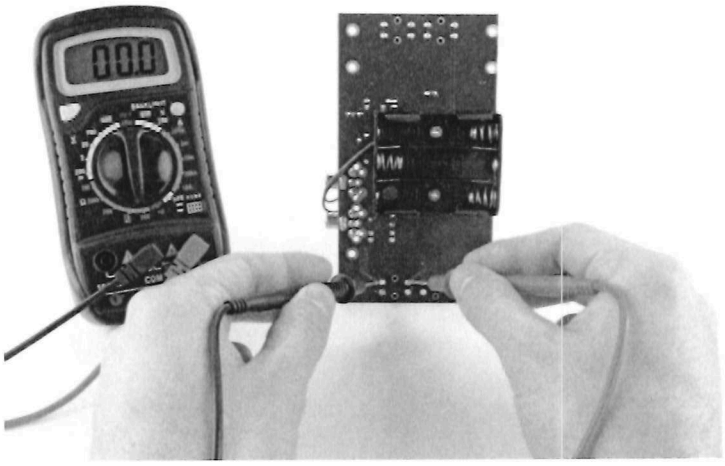

Figure 5

Inductance and transformer theory

When you learn about the principles of operation of linear and switched-mode power supplies for this unit (EC0028), you're expected to demonstrate evidence of your knowledge of inductance and transformer theory. You have learnt about inductance and transformer theory for another unit (EC0074) but the following notes have been provided here for your convenience.

The basic construction of an inductor

In its most basic form, the physical construction of an inductor is just a tightly coiled length of insulated wire. For this reason, the inductor is often called a *coil* (another common name for the inductor is *choke* because of how it reacts to changes in current through it).

The wire is usually copper and is usually insulated using a resin (rather than a plastic like PVC) which gives the wire a rusty red/brown colour. Examples of a simple inductor are shown in Figure 1 below which is a photograph of a *passive crossover*, a device found in the back of most speaker boxes.

Figure 1 *A passive crossover which has two inductors mounted on it*

The hole in the centre of an inductor is called the *core* and it can be left as it is - giving it an *air-core* - or it can be filled with a material that is better conductor of electromagnetic energy such as soft-iron or *ferrite*. Ferrite is a manufactured material made of powdered ceramic mixed with magnetic materials (such as iron-oxide) that is pressed and heated (*sintered*) to turn it into a solid in any desired shape.

 Copyright: Not to be reproduced without permission

Schematic symbol
The schematic symbol used for the inductor reflects its construction and is shown in Figure 2 below.

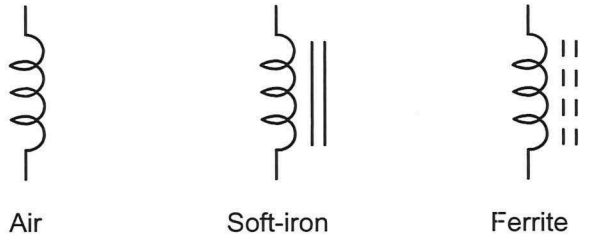

Figure 2 *The schematic symbol for the air-cored, soft-iron-cored and ferrite-cored inductors*

Inductance
Inductors exhibit relatively large amounts of a naturally occurring electrical property called *inductance* (L) which is the opposition to changes in current through a conductor.

To explain, when an electromagnetic field expands out from the centre of a conductor or collapses toward it, the direction of the moving field is at right-angles (perpendicular) to the conductor. This is significant because, if a magnetic field of any sort is moved perpendicular to a conductor, a current is generated in the conductor.

Importantly, this second current wants to flow in the opposite direction to the current that caused the electromagnetic field in the first instance. As current can't flow through a conductor in two directions at once, the current generated by the electromagnetic field never really gets to flow. However, it does slow down any changes in current that cause an expansion or contraction of the electromagnetic field.

In other words, as current increases or decreases in any conductor, the resulting expansion or contraction of the electromagnetic field induces a current back into the wire that opposes the original change of current.

The unit of measurement of inductance is the *Henry* (named after Joseph Henry, a US physicist born in 1797). The symbol for the Henry is (H). One Henry is said to exist when a change of one amp per second induces a back emf of one volt.

Basic transformer operation

If two conductors are placed side-by-side and one of them is connected to an AC source (as shown in Figure 3 below) the AC current flowing through conductor 1 generates an electromagnetic field about it that continuously expands and collapses reversing direction with each half cycle of the sinewave. And, as conductor 2 is physically next to conductor 1, the expanding and collapsing electromagnetic field "cuts" across it at right-angles. This in turn induces an AC current in, and potential difference across, conductor 2. This effect is called *mutual inductance.*

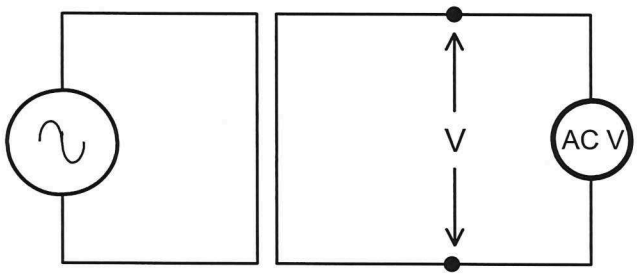

Figure 3 *Mutual inductance is the effect whereby a potential difference can be developed across a wire that is physically next to another wire with an AC current flowing through it*

Mutual inductance is the basis of all transformer operation. That said, transformer design is more sophisticated and involves long lengths of wire for the two conductors (called the primary and secondary) that wound into turns on a core of some sort. An example is shown in Figure 4 below.

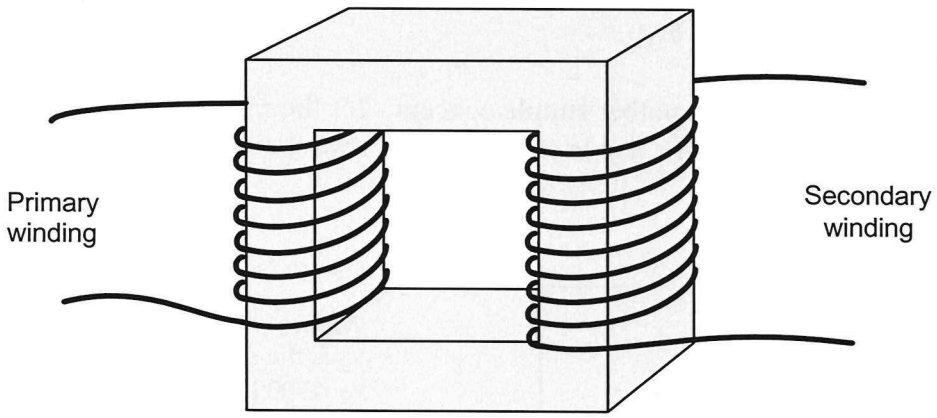

Figure 4 *The basic constructions of a transformer*

 Copyright: Not to be reproduced without permission

Schematic symbols

The schematic symbol for of several basic iron-core transformer designs are shown in Figure 5 below.

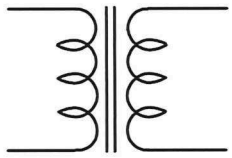

Figure 5a *Single secondary*

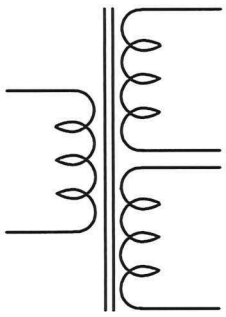

Figure 5b *Dual secondary*

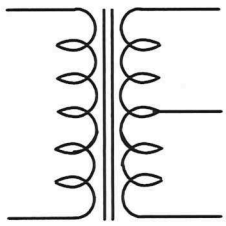

Figure 5c *Centre-tapped*

Transformer turns ratio

Transformer turns ratio is a simple concept - It's the ratio of the number of primary turns to the number of secondary turns and is calculated as shown below:

$$N = \frac{N_P}{N_S}$$

Where:
N_s is the number of turns in the secondary
N_p is the number of turns in the primary and
N is the turns ratio

Transformer voltage ratio

Transformer voltage ratio is another simple concept - It's the ratio of the transformer's primary voltage to its secondary voltage and is calculated as shown below:

$$v_S = \frac{v_P}{N}$$

Where:
v_s is the secondary voltage
v_p is the primary voltage and
N is the turns ratio

Diode and semiconductor basics

When you learn about the principles of operation of linear and switched-mode power supplies for this unit (EC0028), you're expected to demonstrate evidence of your knowledge of diode and semiconductor basics. You have learnt about diode and semiconductor basics for two other units (EC0066 and EC0074) but the following notes have been provided here for your convenience.

Diodes

Diodes are called *semiconductor* devices because they belong to a group of electronics components that are made from semiconductor materials, primarily silicon (*Si*).

There are several different types of diodes including *rectifier* diodes, *small signal* diodes and *zener* diodes. They all operate in the same basic way, the differences between them are in their electrical specifications which affects the applications in which they can be used.

The schematic symbols used to represent rectifier diodes is shown in Figure 1 below.

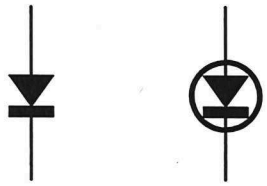

Figure 1 *Schematic symbols used to represent rectifier diodes*

 Copyright: Not to be reproduced without permission

The diode is a polarised device: that is, to operate as expected, it can only go in the circuit one way. One of the diode's leads is positive (called the anode) and the other is negative (called the cathode). Which diode's leads are anode and cathode are shown on the schematic symbol in Figure 2 below.

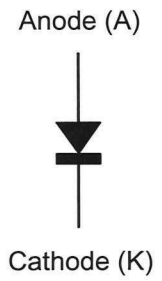

Figure 2 *The polarity of the diode's leads*

Working out which lead is which on an actual diode is fairly easy. Diodes usually have a band marked on the body towards one end. Rectifier diodes are usually black and the band is silver. The diode's cathode is the lead on the same end of the body as the band. This is shown in Figure 3.

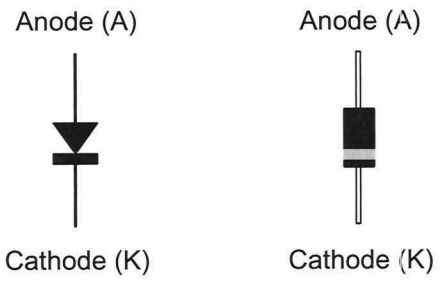

Figure 3 *The cathode is the lead on the same end of the body as the silver band*

Semiconductor theory

All diodes are the combination of "p" and "n" versions of the semiconductor materials from which they're made. The point where the two types of semiconductors meet is called the *p-n junction*. This is shown in Figure 4 below.

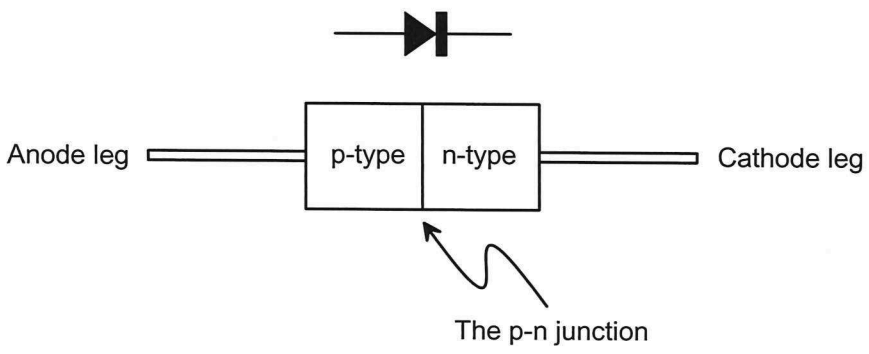

Figure 4 *The basic physical construction of a diode*

The operation of the diode is the operation of the p-n junction and this usually described using the graph of anode-cathode voltage versus anode-cathode current in Figure 5 below.

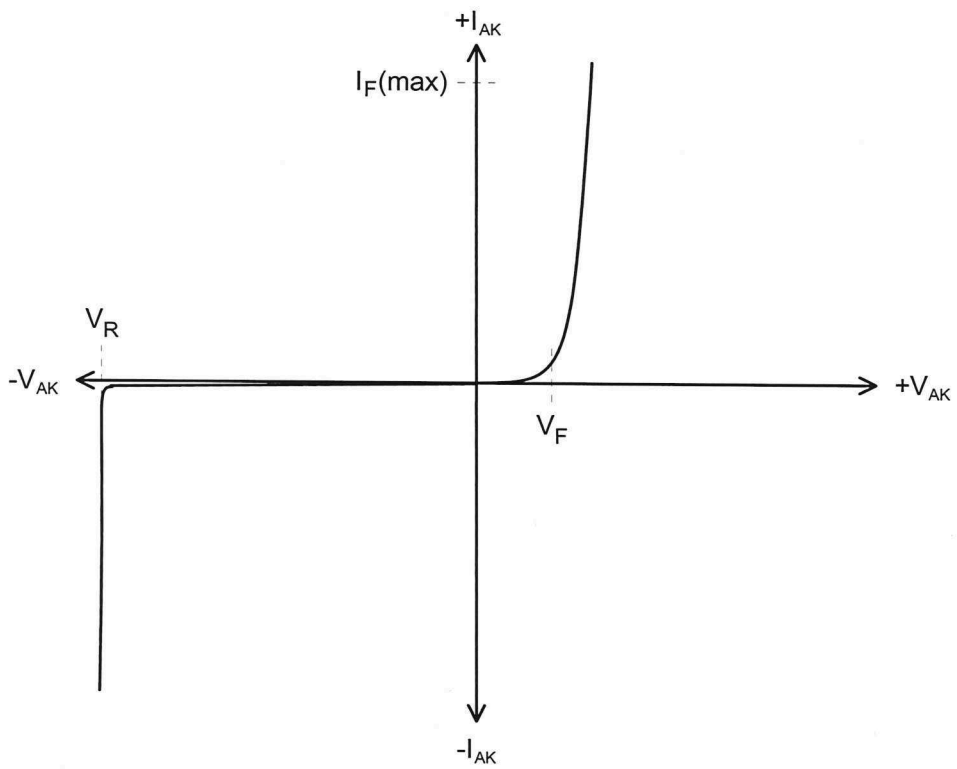

Figure 5 *The graph of anode-cathode voltage versus anode-cathode current*

 Copyright: Not to be reproduced without permission

The graph tells us about the operation of the diode when it can be forward biased (the portion of the graph where both the x and y values are positive) and when it is reverse biased (the portion of the graph where both the x and y values are negative).

The operation of the diode when it can be forward biased can be summarised as follows:

- When the diode's anode is made positive with respect to its cathode but is a voltage below the diode's forward bias voltage (V_F), no current (or a only a negligible amount of current) flows.

- Once the anode-cathode voltages exceeds 0.6V (or thereabouts) the diode turns on and a measurable amount of current flows from the anode to the cathode.

- The manufacturers of diodes always specify a maximum allowable forward current denoted by $I_{F(max)}$. If this current is exceeded, the device will overheat and be destroyed.

- The typical potential difference across a rectifier diode when it has the maximum rated forward current flowing through it ($I_{F(max)}$) is about 1V.

The operation of the diode when it is reverse biased can be summarised as follows:

- When the diode's anode is made negative with respect to its cathode and the potential difference across the diode is below the diode's rated reverse breakdown voltage (V_R), only a minute amount of current flows (leakage current).

- Once the potential difference across a reverse biased diode exceeds the diode's rated reverse breakdown voltage current will flow through it. Importantly, current will flow from cathode to anode which is the "wrong" way through it. This will likely damage the diode unless the circuit has been designed in the knowledge that this it can/will happen (as is the case with zener diodes).

Heatsink selection considerations

When you learn about the principles of operation of linear and switched-mode power supplies for this unit (EC0028), you're expected to demonstrate evidence of your knowledge of heatsink selection considerations. You have learnt about heatsink selection considerations for another unit (EC0066) but the following notes have been provided here for your convenience.

Heatsinking

Virtually all power transistors and ICs need to be mounted on a *heatsink*. A heatsink is a metal device that has good *thermal conductivity* to draw the heat away from the semiconductor. This helps the semiconductor run cooler than it normally would, preventing it from over-heating and permanent damage. Most heatsinks are made from black anodised aluminium. The size and shape of the heatsink depends on the amount of heat that needs to be drawn away from the device. An example of a heatsink is shown in Figure 1 below.

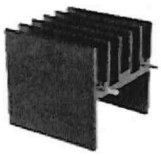

Figure 1 *An example of a heatsink*

Knowing what size heatsink to use is quite tricky, however, the bigger the better! Using a heatsink that's larger than the minimum required guarantees the semiconductor runs cooler rather than warmer. The only disadvantage of a larger heatsink is the extra bulk, weight and cost.

Heatsinks come with a rating that tells us how good (efficient) it is at dissipating heat, known as its thermal resistance. The unit for this rating is *degrees Celsius per watt* and is written as °C/W. A small heatsink might have a rating of 10°C/W, while a larger, more efficient, heatsink may have a thermal resistance of 1°C/W. Engineers use a formula to calculate the minimum size of a heatsink for a given application, but you won't be asked to do that!

Heatsinks require good air flow to be able to do their job properly. For this reason, heatsinks are often mounted on the outside of equipment cases with the fins of the heatsink in a vertical orientation. Where the heatsink is inside the case, the case normally has ventilation holes. Be careful never to block these holes or restrict the airflow they allow. Some equipment use one or more fans to keep the heatsink cool; you've probably seen the CPU heatsink and associated fan inside your computer!

 Copyright: Not to be reproduced without permission

Mounting

The semiconductor device being mounted normally has a metal case or metal bracket that attaches to the heatsink. This metal case or bracket is usually electrically connected to the *collector (*or *drain* in the case of a MOSFET*)* terminal of the transistor (internally). The reason for this is that the its the collector (or drain) terminal that dissipated the power.

Therefore, when more than one device is mounted on the same heatsink, they need to be electrically insulated from each other so that their collectors don't short out. When a single transistor is mounted on a heatsink, it's still normally insulated from the heatsink to prevent the heatsink being at the same potential as the transistor's collector - which may be at 340V or higher.

Therefore, the mounting system must ensure good electrical insulation, while also providing good thermal (heat) conduction. This is achieved by using a thin mica or rubber washer (insulator) and silicon compound (a white paste) that provides additional thermal conduction but electrical isolation. A set of non-conductive spacers (or bushes) are often used to prevent the mounting bolt or transistor leads touching the metal heatsink. Some of this mounting hardware is shown in Figure 2.

Figure 2 *The hardware required for mounting a transistor onto a heatsink*

Section 1 An introduction to discrete component series regulator circuits

Purpose To introduce you to the operation of discrete component regulator circuits and enable you to predict and/or measure their key voltages and currents.

Objectives At the end of this section you should be able to:

- Explain the basic premise of series regulation
- State the advantages and the disadvantages of series regulation when compared to the other forms of regulation
- Recognise the circuit of a voltage divider biased BJT series regulator
- Predict the voltages around the circuit of a voltage divider biased BJT series regulator
- Calculate the current through, and the power dissipated by, the pass transistor in a voltage divider biased BJT series regulator
- Explain how a zener diode in the base circuit of a voltage divider biased BJT series regulator provides for line regulation
- Identify and explain the operation of a technique that is used to provide rejection of line transients to improve the line regulation performance of voltage divider biased BJT series regulators
- State the name of two other components that are used in place of a regular zener diode to further improve the line regulation performance of voltage divider biased BJT series regulators
- Use a DMM to perform measurements of key voltages and currents around and current of a discrete component series regulator circuit

 Copyright: Not to be reproduced without permission

Introduction

Recall that there are three basic types regulation including: shunt, series and switched. You have previously learnt a little about both shunt and series regulation for a pre-requisite to this unit.

This unit deepens your understanding of series regulation by introducing you to discrete component series regulator circuits. After that, you'll be introduced to discrete component switching regulator circuits and switched-mode power supplies.

Series regulation

Figure 1 below shows a filtered bridge rectifier connected to a load via a series regulator. Notice that the regulating device is connected in series with the load which gives this type of regulation its name.

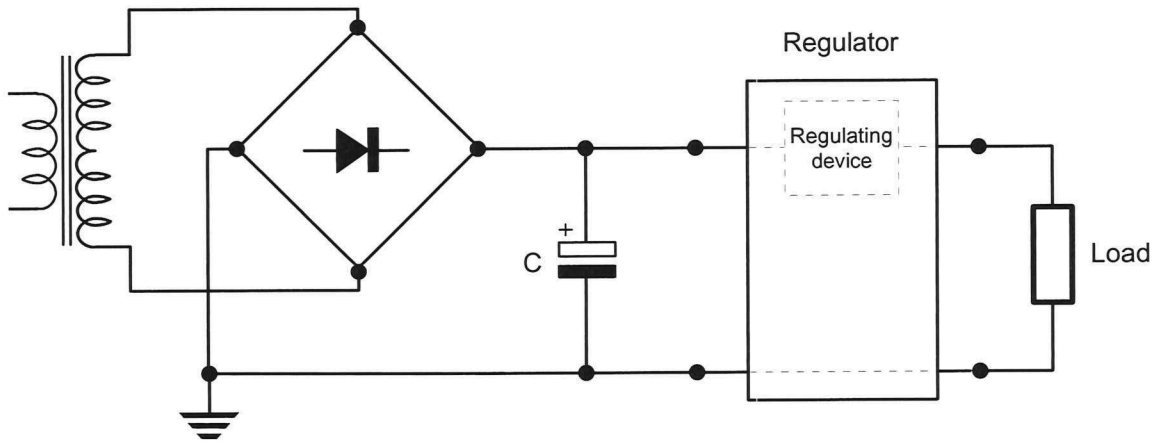

Figure 1 *The regulating device of a series regulator is connected in series with load*

Before the operation of the series regulator is explained, a point needs to be made first. As the load and the regulating device are in series with each other, the load current must pass through the regulating device and this is shown in Figure 2 below.

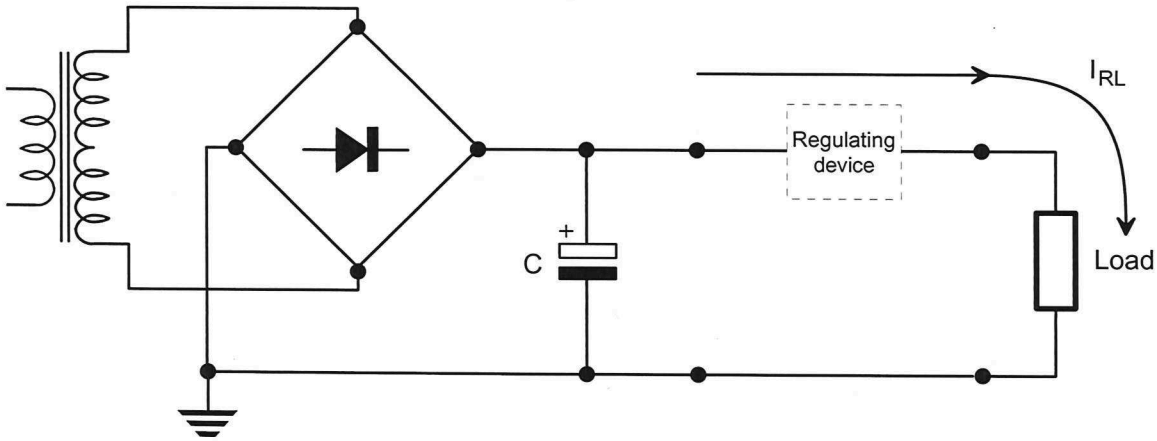

Figure 2 *The load current also passes through the regulating device*

Importantly, the load current passing through the regulating device develops a potential difference across it and this means that, for the circuit to provide a regulated DC output voltage at a particular level, the unregulated DC input voltage must be bigger than the output. This is highlighted in Figure 3 below.

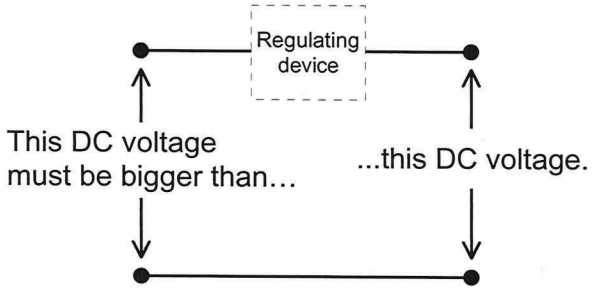

Figure 3 *The series regulator's input voltage must be bigger than its output voltage*

 Copyright: Not to be reproduced without permission

Typically, the unregulated input voltage should be **at least 2V bigger** than the output voltage, though sometimes it's more than the minimum for a variety of reasons. The potential differences around the circuit are shown in Figure 4 below for a 12V series regulator with a 15V unregulated DC input voltage.

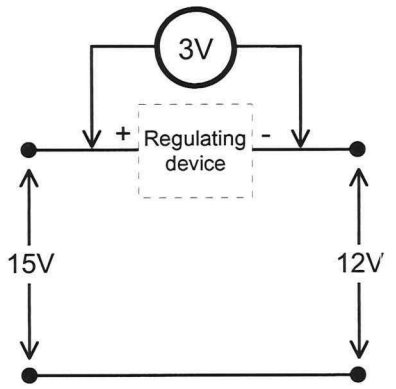

Figure 4 *The difference between the input and output voltages is dropped across the regulating device*

Advantages and disadvantages of series regulation

The advantages and disadvantages of series regulation depend on the type of regulation that you're comparing it to.

When compared with shunt regulation its advantage is greater efficiency. That is, there are fewer losses in the circuit of series regulators than there are in shunt regulators. The reason for this is two-fold. First, the series regulator has only one component dissipating any significant amount of power (the regulating device) instead of two in the shunt regulator (the series resistor and the regulating device). Second, the series regulator only draws as much current as needed by the load whereas the shunt regulator always draws maximum current regardless of the load's resistance. The only real disadvantage is the necessity for more components to implement them than shunt regulators need (but this is a small price to pay considering the efficiency gains, especially as you pay for electricity every quarter).

When compared with switched regulation, series regulation is not as efficient which is a disadvantage but it doesn't emit electromagnetic radiation (EMR) which is an advantage.

Efficiency and series regulators

Although you'll not be asked to calculate the efficiency of regulators for any assessments for this unit, it's important to understand why series regulators are more efficient than shunt regulators.

To explain this, let's compare the efficiency figures of both a series and shunt regulator having a 15V unregulated DC input voltage, a 12V regulated DC output voltage and connected to an 800Ω load. A quick calculation would determine that the load current for both regulators is 15mA (ie $\frac{12V}{800\Omega} = 15mA$).

Figure 5 below shows that the input current to a shunt regulator that has been designed for maximum efficiency would be 20mA (assuming the regulating device needs a minimum of 5mA of operating current, a typical figure).

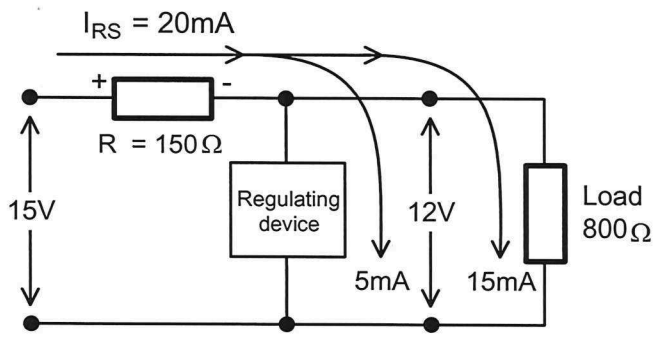

Figure 5

To calculate the circuit's efficiency, the input and output powers are needed and their calculations are shown below:

$$Pin = Vin \times Iin$$

$$Pin = 15V \times 20mA$$

$$Pin = 300mW`$$

$$Pin = Vin \times Iin$$

$$Pout = 12V \times 15mA$$

$$Pin = 180mW$$

The circuit's efficiency can now be found:

$$\eta = \frac{Pout}{Pin} \times 100$$

$$\eta = \frac{180mW}{450mW} \times 100$$

$$\eta = 60\%$$

 Copyright: Not to be reproduced without permission

Now consider the series regulator with the same circuit parameters shown in Figure 6 below. Importantly, notice that the fundamental design of series regulation means that the input current must be the same as the load current. (In truth, they're not exactly the same for reasons not discussed here but the difference is small and can be ignored for the purpose of this explanation.)

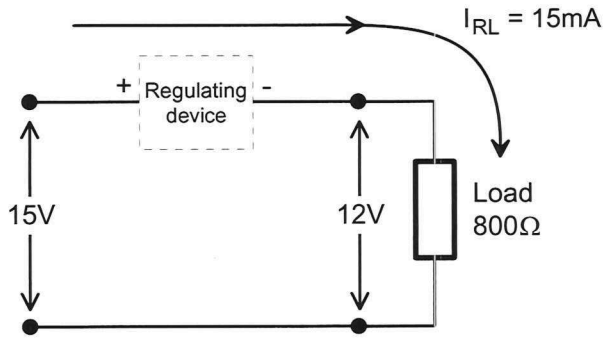

Figure 6

When we calculate the circuit's input and output powers, we find that, although the output power is the same as the output power of the shunt regulator (obviously) the input power is lower.

$$Pin = Vin \times Iin \qquad Pout = Vout \times Iout$$

$$Pin = 15V \times 15mA \qquad Pout = 12V \times 15mA$$

$$Pin = 225mW \qquad Pout = 180mW$$

So when the circuit's efficiency is calculated, we find that it's better (ie closer to 100%).

$$\eta = \frac{Pout}{Pin} \times 100$$

$$\eta = \frac{180mW}{225mW} \times 100$$

$$\eta = 80\%$$

The voltage divider biased BJT as a series regulator

Figure 7 below shows the circuit of a voltage divider biased BJT amplifier operating from a 10V supply. The values of R_{B1} and R_{B2} are given and this allows the base and emitter voltages to be calculated as shown.

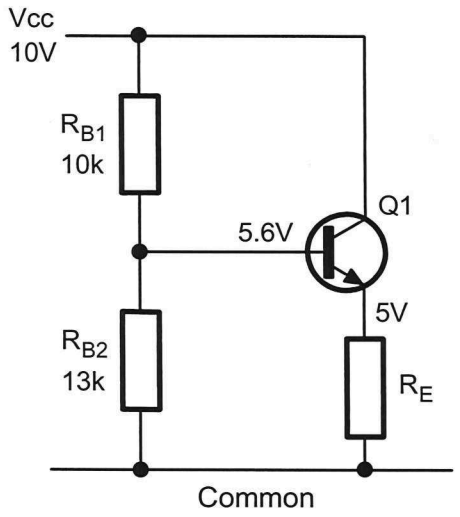

$$V_B = Vcc \times \frac{R_{B2}}{R_{B1}+R_{B2}}$$

$$V_B = 10V \times \frac{13k\Omega}{10k\Omega+13k\Omega}$$

$$V_B = 5.6V$$

$$V_E = V_B - 0.6V$$

$$V_E = 5.6V - 0.6V$$

$$V_E = 5V$$

Figure 7

As you can see, the voltage on the emitter pin of the BJT and therefore the potential difference across R_E is 5V. Importantly, the potential difference across R_E has been found without knowing its resistance - notice that the value of R_E is not given. This means that the value of R_E has no effect on its own potential difference. That being the case, any changes in the resistance of R_E do not result in changes in the potential difference across it (as long as the changes in R_E are within reason of course).

This fact is taken advantage of and the circuit is used as a simple series regulator that can provide a respectable level of load regulation. An unregulated DC input voltage is connected to the supply rail (V_{CC}), the regulated DC output voltage is available between the BJT's emitter pin and common and the output voltage is set by the two base resistors. This is shown in Figure 8 on the next page with the circuit redrawn in the conventional manner.

[As an important aside, when a transistor is biased so that it is turned but not driven into saturation, it's operating in the region of its transfer characteristic that is fairly linear (ie the region that is almost a straight line on the graph of V_{BE} versus I_C.). It's for this reason that regulators like this are called linear regulators. As you will see, switching regulators are not statically operated in this region.]

 Copyright: Not to be reproduced without permission

The transistor (*Q1*) is often referred to as the *pass transistor* and is the circuit's regulating device.

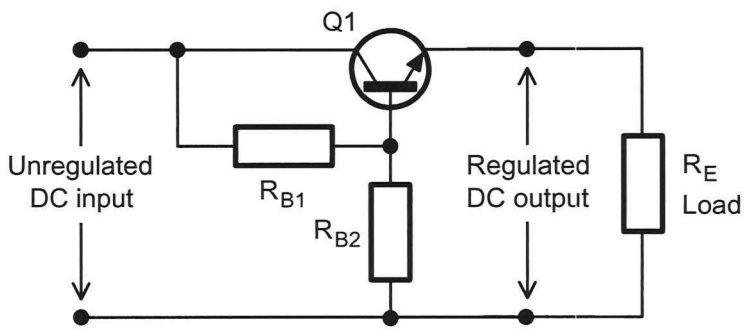

Figure 8 *The circuit in Figure 7 redrawn showing how it is used as a simple series regulator*

The discussion on the previous page explains why the circuit's output voltage is independent of the value of R_E (the load). To explain what actually goes on around the circuit in response to changes in the load resistance, consider the circuit in Figure 9 below. It's the circuit in Figure 7 showing resistor values and circuit voltages but redrawn in the manner of Figure 8 above.

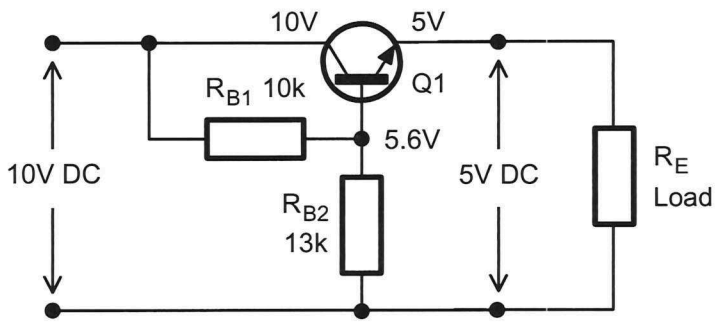

Figure 9 *The circuit in Figure 7 redrawn in the manner of Figure 8 above*

Now, to understand why this works to keep the output voltage constant, let's consider what happens around the circuit if the load resistance goes down:

- If the load resistor's value drops, the potential difference across it (and therefore the output voltage) would also start to drop because a smaller resistor has a smaller potential difference across it.
- However, as the pass transistor's base voltage (V_B) is set by the two base resistors, any drop in output voltage causes a corresponding increase in its base-emitter voltage (V_{BE}).
- The increase in the transistor's V_{BE} biases it on harder increasing its collector current.
- As the collector and load currents are the same, an increase in collector current is also an increase in load current.
- The increase in load current increases the potential difference across the load and returns it to 5V.
- The output voltage doesn't go above 5V as this would being to turn the transistor off, reducing the collector/load current and reducing the output voltage.

Students may recognise this process as negative feedback (recall from your earlier studies that the emitter resistor provides current derived, series fed negative feedback).

The slight dip in output/load voltage due to the drop in load resistance is small and is corrected quickly so that it would be too difficult to see on the display of a DMM if one was being used to measure it. (That said, the dip in output/load voltage could be captured on a suitably triggered storage CRO.)

If the load resistance increased instead of dropped in value, there would be a slight and brief bump in the output voltage that would be equally difficult to see. These dips and bumps in output voltage are unlikely to trouble most loads but in situations where they might, they can be filtered out by connecting a 10μF (or similar sized) capacitor across the regulator's output.

 Copyright: Not to be reproduced without permission

Line regulation and the voltage divider biased BJT series regulator

While the voltage divider biased BJT series regulator discussed this far provides reasonable load regulation, its line regulation is non-existent. To explain, the output voltage is set by the pass transistor's base voltage. If the base voltage goes up or down the output voltage does so as well.

Unfortunately, the pass transistor's base voltage can go up or down very easily because it is set by the two base resistors and the unregulated DC input voltage. If the unregulated DC input voltage changes (due to changes in mains) the potential difference across the two resistors and therefore the transistor's base voltage and the circuit's output voltage change also.

That being the case, the circuit must be modified so that the base voltage is fixed despite changes in the unregulated DC input voltage. The zener diode is ideal for this purpose as shown in Figure 10 below.

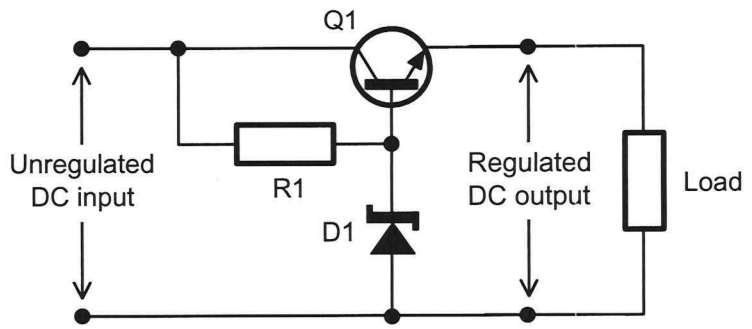

Figure 10 *Voltage divider biased BJT series regulator using a zener diode to provide for line regulation*

As we know, the zener diode holds the potential difference across itself reasonably constant. If the unregulated DC input voltage varies, only the potential difference across *R1* and the current through the zener diode vary (significantly). The potential difference across the zener diode is often referred to as the "reference" voltage (for reasons that are discussed in Section 3).

R1 is needed in this circuit to drop the difference between the unregulated DC input voltage and the zener diode's avalanche voltage. It also limits the current through the zener diode but, at the same time, its value must be low enough so that the current through the zener diode exceeds its rated minimum operating current.

Conveniently, the zener diode makes calculating the voltages around the circuit a little easier as shown next.

Predicting voltages at key points around the circuit
The voltage on the base of the transistor is the same as the diode's zenering voltage:

$$V_{B(Q1)} = V_{D1}$$

The calculation for the output/load voltage is the same as before:

$$Vout = V_L = V_{B(Q1)} - 0.6V$$

Calculating the power dissipation of the pass transistor
In some situations you may need to know the power dissipated by the pass transistor which is calculated using the equation:

$$P_{Q1} = V_{CE(Q1)} \times I_{RL}$$

Choosing an appropriate value for R1
An appropriate value for *R1* which is calculated using the equation:

$$R1 = \frac{Vin_{(unregulated)} - V_{D1}}{I_{D1(I_{ZT})}}$$

The current through *R1* is important because it sets the current through the zener diode (the two are connected in series). Zener diodes need a certain operating current (labelled I_{ZT} in datasheets) to obtain the specified zenering voltage within a range of about ±5%. If the resistor is faulty, you must replace it with another resistor having the same value otherwise the zenering voltage will likely be different and this will affect the power supply's output voltage.

You'll not be asked to use this equation in an assessment. It's provided here to show you that the calculation is a simple one (Kirchhoff's Voltage Law together with Ohm's Law) and to help you understand a fault-finding issue discussed in another chapter.

 Copyright: Not to be reproduced without permission

Practise using these equations by trying the following questions for yourself.

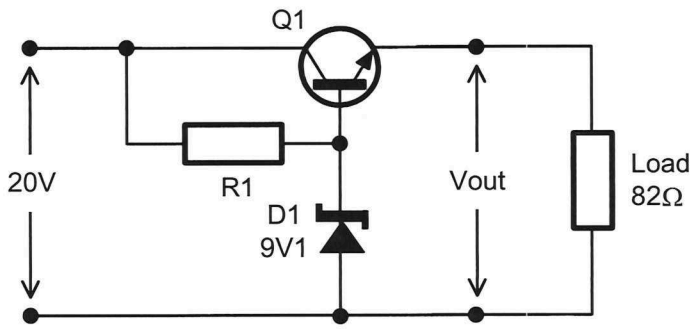

Figure 11

1. What is the voltage on the base of the pass transistor ($V_{B(Q1)}$) in Figure 11 above?

   9.1 V

2. Calculate the circuit's output voltage (*Vout*).

   $V_{OUT} = 9.1 - 0.6 = 8.5V$

3. Calculate the load current (I_{RL}).

   $\frac{V_{OUT}}{R_L} = \frac{8.5}{82} = 104\ mA$

4. Calculate the power dissipated by the load (P_{RL}).

   $8.5^2/82 = 880\ mW$

5. Calculate the power dissipated by the pass transistor (P_{Q1}).

$(20-8.5) \times 0.104 = 11.5 \times 0.104 = 1.2W$

6. How can the power dissipated by the transistor be reduced?

Lower input voltage

7. What effect would reducing the power dissipated by the pass transistor have on the circuit's efficiency?

8. What is the circuit's smallest allowable unregulated DC input voltage?

9. What is an appropriate *preferred resistor value* that can be used for *R1* if the diode's nominal operating current ($I_{D1(IZT)}$) is 5.5mA?

 Copyright: Not to be reproduced without permission

Improving line regulation

Using the zener diode to set the base voltage of the voltage divider biased BJT series regulator is a simple and convenient method of introducing a good measure of line regulation to the circuit. However, zener diodes may not be able to provide sufficient line regulation for some loads due to the zener diode's response to transients and temperature changes. The following notes explain why.

Zener diode line transient response

Transients are "voltage spikes" or quick changing but short lasting increases in voltage. Transients are common on mains and they're easily transferred to the output of filtered bridge rectifier circuits.

[**Note:** Surprisingly, the filter capacitor doesn't do a good job of filtering out transients. To explain, as transients are quick changing voltages, they're actually complex AC waveforms with a fundamental and harmonics at very high frequencies. As capacitive reactance gets smaller for high frequencies, the filter capacitor should theoretically be able to easily shunt these high frequency AC components to common. However, the physical construction of large value electrolytic capacitors gives them a relatively large amount of inductive reactance at high frequencies. So, although filter capacitors should look like a low resistance to common for transients, their inductive reactance means that this is not actually the case.]

When the changing voltage of a transient is fast enough, the zener diode may not be able to react quickly enough to keep the potential difference across itself constant. In which case, the spike can appear across the zener diode and therefore across the load. This is shown using the example of an 8.5V series regulator Figure 12 below.

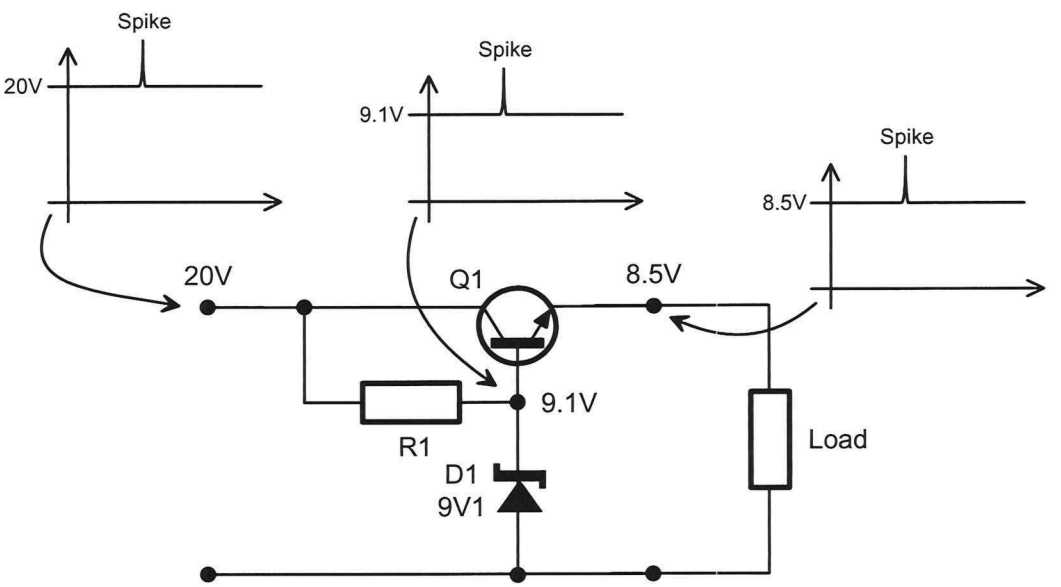

Figure 12 *A transient on mains can appear as a transient on the regulated DC output voltage*

The solution to this problem is to slow the transient down and an RC circuit is ideal for this purpose. To explain why, consider the circuit in Figure 13 below. As you know, when the switch is thrown from position B to A, the EMF voltage is instantly applied to the RC circuit and the capacitor charges up exponentially.

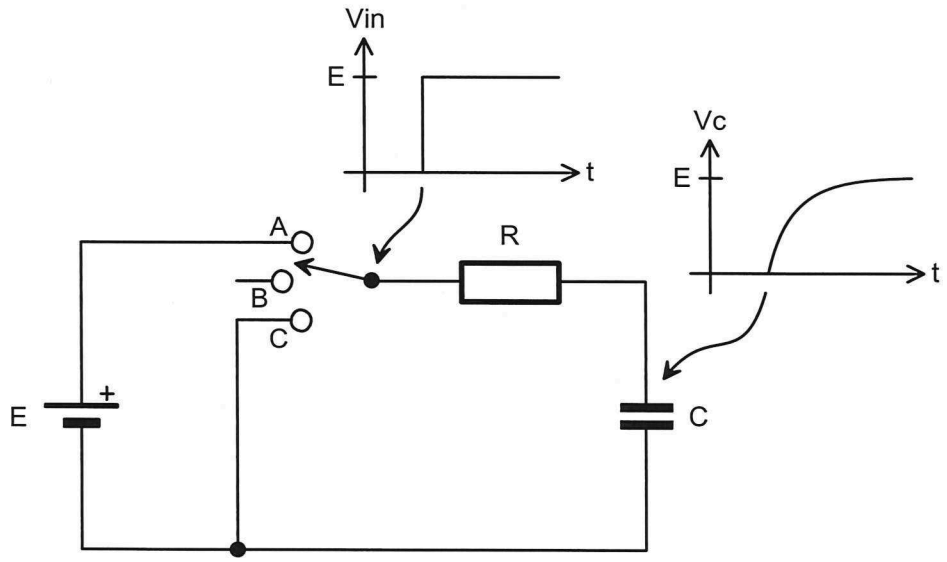

Figure 13 *The input and capacitor voltages in an RC circuit after the switch is thrown from position B to A*

The graphs in Figure 13 show that the potential difference across the capacitor changes much more slowly than the applied voltage. In other words, the RC circuit slows down changing voltages. This effect can be used in voltage divider biased BJT series regulators to slow the transient down enough so that the zener diode can cope with it and prevent it from reaching the regulator's output. The new circuit is shown in Figure 14 below.

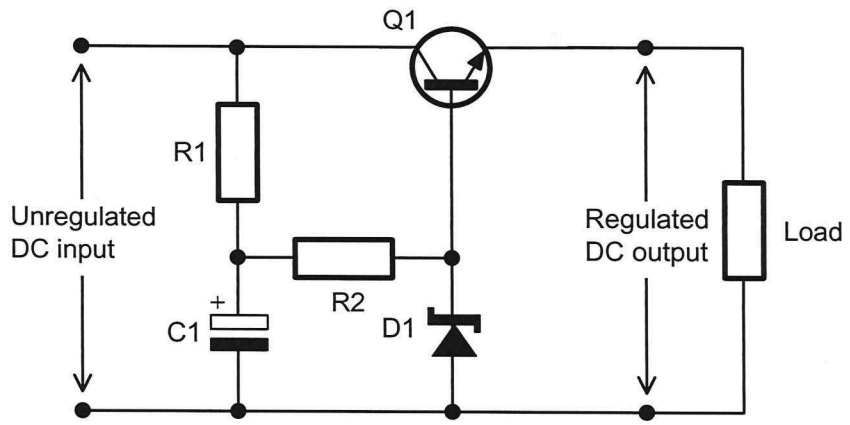

Figure 14 *Voltage divider biased series regulator with an RC circuit to help reject transients from mains*

Figure 15 below shows that the spike on the unregulated DC input voltage becomes less pronounced across the capacitor making the change much more manageable for the zener diode to compensate for.

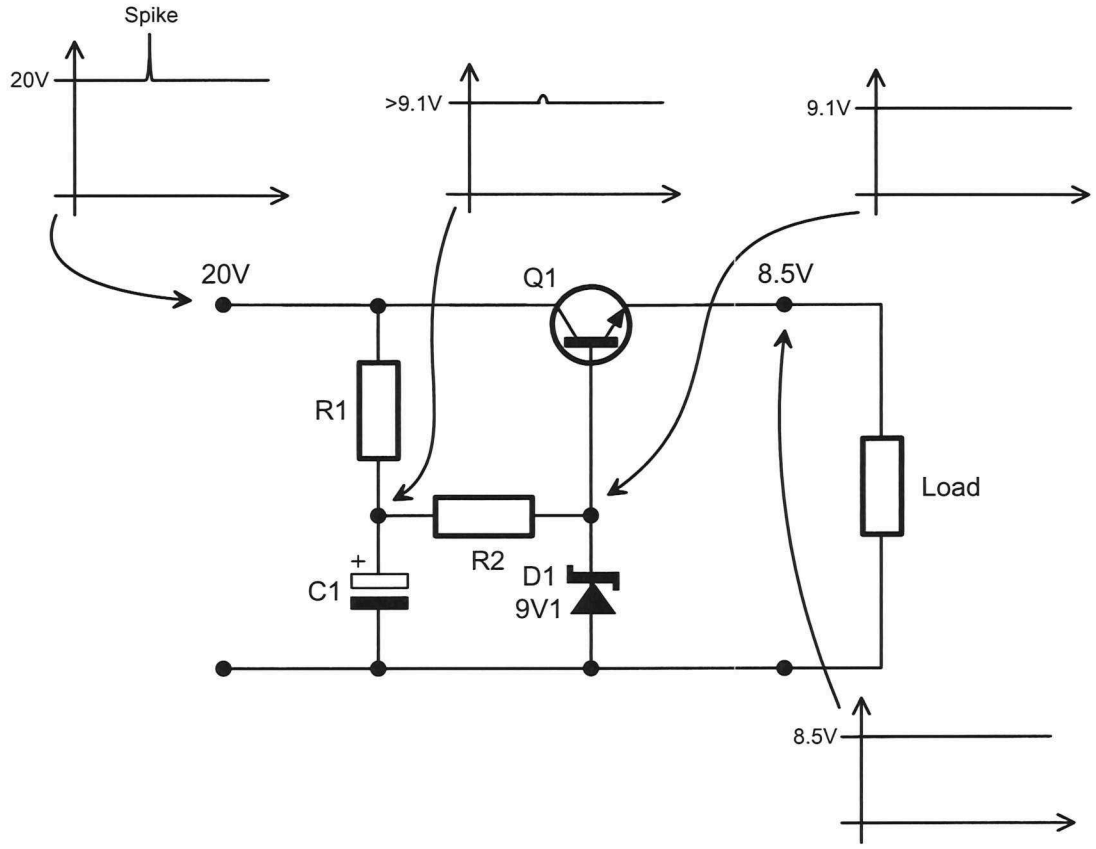

Figure 15 *R1 and C1 form an RC circuit that slows the changing voltage of the transient down*

The capacitor is typically a value ranging from 1μF to 10μF. This should slow the transient down enough without having to add too large a capacitor (physically speaking).

Zener diode temperature response

The avalanche voltage of zener diodes is affected by the device's temperature. This can be a problem for two reasons. First, the power supply is mounted inside most electronics equipment. So, when the equipment is operated and warms up, the zener diode warms up too which causes a change the regulator's output voltage.

Second, although variations in mains technically shouldn't cause variations in potential difference across the zener diode, it does cause variations in the current through it. And, as you know increasing/decreasing the current through any device increases/decreases its temperature. So, lasting variations in mains cause temperature variations in the zener diode which cause subsequent changes in the regulator's output voltage.

One design solution to this problem is the use of *temperature compensated* zener diodes (often just referred to as *reference diodes*) in place of a regular zener diode. These devices have a zennering/avalanche just like normal zener diodes except they can resist variation in this voltage due to changes in temperature.

Temperature compensated zener diodes have the same schematic symbol as normal zener diodes and are physically similar so you may not realise when one is being used. That being the case, care needs to be taken when replacing zener diodes with substitutes. Only the part number distinguishes a temperature compensated zener diode from a regular one. That said, temperature compensated zener diodes have poor regulation below 6V and so a zener diode with a voltage rating below this is probably a regular one.

Another design solution to the temperature response limitations of the zener diode is the use of a device called a *bandgap voltage reference*. These devices are amplifier circuits implemented by an integrated circuit and designed to have an avalanche voltage in the same way that zener diodes do but without relying on the reverse breakdown mechanism of a p-n junction. Typical avalanche voltages available include; 1.22V, 2.048V, 2.5V, 4.096V and 5V.

The schematic symbol that is used for 3-pin bandgap voltage references is similar to normal zener diodes and shown in Figure 16 below.

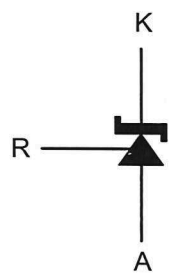

Figure 16 *The schematic symbol for a 3-pin bandgap voltage reference*

The extra lead is used to trim the reference voltage and is denoted using the letter *R*. These devices are usually available in the TO-92 package and so can be mistaken for a transistor. Other bandgap voltage references come in a six pin or eight pin IC package and are marked as such by whatever convention is used for ICs in the schematic diagram.

Copyright: Not to be reproduced without permission

Student notes

Skill practice 1

Practise measuring load voltage and current for the output of voltage divider biased BJT series regulator

This exercise is practise for the sorts of skills you may be required to perform in a practical test. Remember, in any practical tests you will be working alone so make sure that you can perform all the steps. It should take you about 1¼ hours to complete this exercise.

Equipment

- prototyping panel
- 15V AC power supply
- decade box
- two DMM
- unregulated power supply module
- BD139
- 15V 400mW zener diode
- 100Ω 5W resistor
- 560Ω ¼W resistor
- 10kΩ ¼W resistor
- banana leads
- hook-up wire
- wire strippers

Pinout data

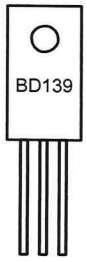

E C B

Plastic side facing you

Remember:

Follow TAFE NSW WHS guidance at all times!

 Copyright: Not to be reproduced without permission

Work tasks

1. Read your WHS responsibilities at the top of the form below. Then conduct a WHS risk assessment and record your findings in the space provided.

Responsibilities of students under the Model WHS Act: s28

- Take reasonable care for your own health and safety by working safely at all times
- Take reasonable care to ensure that your acts or omissions don't put the health and safety of others at risk
- Follow all TAFE NSW WHS guidance and comply with all reasonable instructions from TAFE NSW staff to assist them in complying with the TAFE NSW WHS requirements
- In addition to the above, you must:
  - use and maintain machinery, tools and all other equipment properly and safely
  - ensure that your work area is free of hazards
  - notify a TAFE NSW staff member of actual or potential hazards
  - wear/use prescribed safety equipment
  - take notice of any safety signs and adhere to their instructions

Risks involved in this activity include:	**Control measures:**
Trip hazards (eg students bags) Objects dropped on feet (while equipment is taken to and from workbenches).	Move bags and other objects from walkways Plan lifting of equipment
Others: _____	Other: _____
_____	_____
_____	_____

My signature here indicates that I have read and understand my responsibilities under the Model WHS Act s28 (detailed above). I have also conducted a risk assessment before undertaking this activity and have identified measures to control these risks and have implemented them.

Signature: _____ Date: _____

2. Gather the equipment needed for this exercise.

3. Wire the circuit of Figure 1 on the prototyping panel.

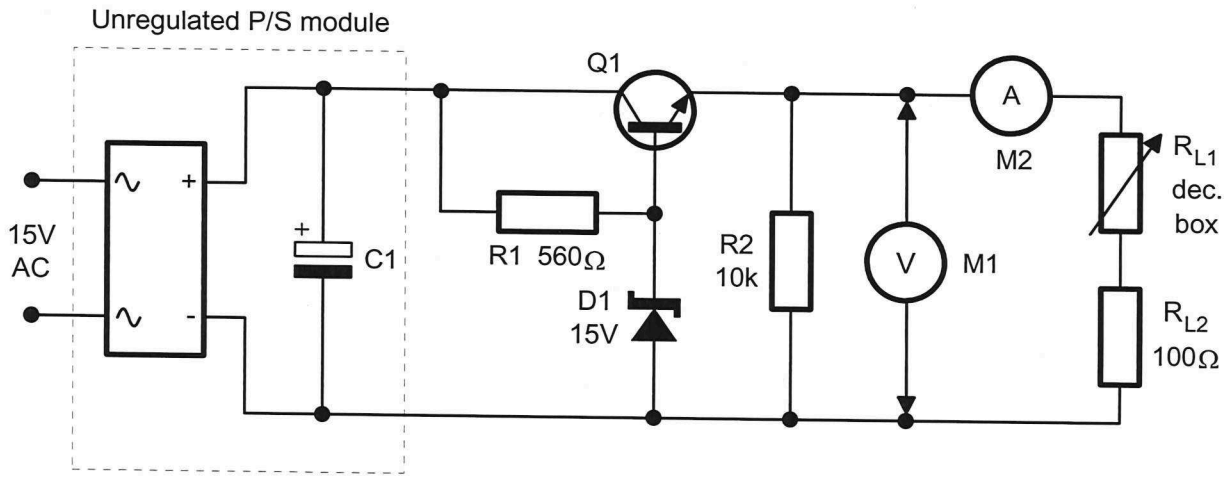

Figure 1

4. Set the decade box's resistance for 2.4kΩ then turn on the AC power supply.

   Note: The decade box and 100Ω resistor are working together to implement as "dummy load" for this circuit.

   Self check: If your circuit is working correctly, you should measure an output voltage of about 14.4V (on M1) and a load current of about 6mA (on M2). If you don't measure these values then turn off the AC power supply immediately and check your wiring.

5. Disconnect the dummy load from the circuit by disconnecting one of the wires to the decade box.

6. Measure the unloaded output voltage. Record your measurement in the first row of Table 1.

7. Reconnect the dummy load.

8. Adjust the decade box's resistance until the load current is 10mA.

9. Measure and record the output voltage.

10. Repeat steps 8 and 9 for all the values of load current listed in Table 1.

Copyright: Not to be reproduced without permission

Table 1

Load current	Output voltage	Load current	Output voltage
No load		70mA	
10mA		80mA	
20mA		90mA	
30mA		100mA	
40mA		110mA	
50mA		120mA	
60mA		130mA	

11. Turn off the AC power supply.

12. Draw a graph of load current versus load voltage on the graph below.

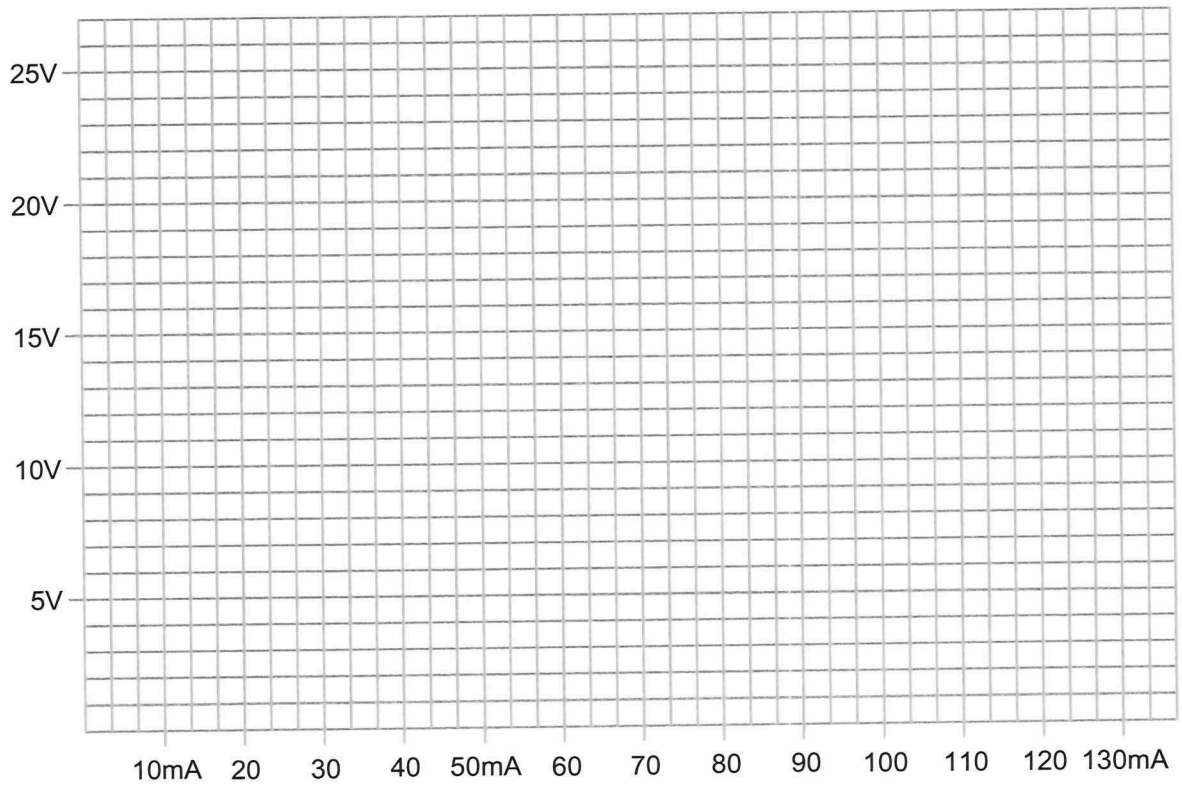

The teacher needs to check your work at this point...

13. Calculate the circuit's load regulation percentage for the 40mA load current using the equation: $Load\ regulation = \frac{V_{no-load} - V_{full-load}}{V_{full-load}} \times 100$. Record this figure in Table 2 below.

14. Repeat Step 13 for the other load currents listed in the table.

Table 2

Load current	Load regulation		
	Zener diode shunt reg.	This circuit	3-terminal reg. IC
40mA	1.17%		0.07%
60mA	2.37%		0.13%
80mA	3.18%		0.13%
100mA	4.43%		0.19%

Question 1
Compare the load regulation figures for this circuit with the same figures for the typical zener diode shunt regulator. Which is the better set of figures and why?

_____

_____

_____

Question 2
The 3-terminal regulator IC is a series regulator too. Speculate on why it has better typical load regulation figures than this circuit.

_____

_____

_____

Copyright: Not to be reproduced without permission

The teacher needs to check your work at this point...

Review questions

Answer these questions to check your understanding of what you have learnt for this chapter. Doing this will also help to prepare you for the tests.

1. When compared with shunt regulation, series regulation is

   - ☐ more efficient but produces more EMR.
   - ☐ less efficient and produces less EMR.
   - ☑ more efficient but is usually a more complex circuit.
   - ☐ less efficient and is usually a more complex circuit.

2. When compared with switched regulation, series regulation is

   - ☐ more efficient but produces more EMR.
   - ☑ less efficient and produces more EMR.
   - ☐ more efficient and produces less EMR.
   - ☐ less efficient but produces less EMR.

3. Series regulator circuits attempt to hold the load voltage constant for changes in

   - ☐ room temperature.
   - ☐ line voltage.
   - ☐ load current.
   - ☑ line voltage and load current.

Copyright: Not to be reproduced without permission

Questions 4 to 19 refer to the circuit in Figure 1 below

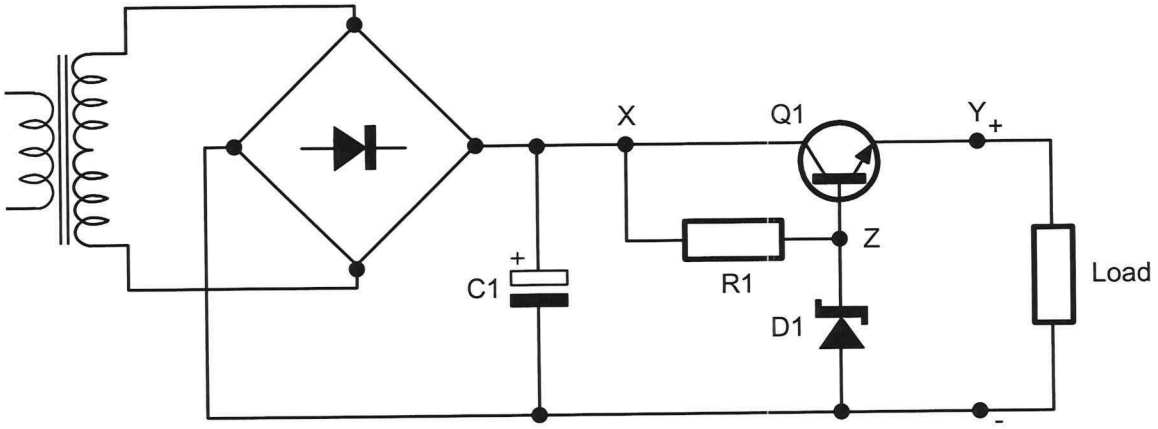

Figure 1

4. What is the name often used for the transistor *Q1*?

_____

5. What is the purpose of *R1*?

_____

_____

6. What is the purpose of the *D1*?

_____

_____

7. What is the purpose of the *C1*?

_____

_____

8. The voltage at the point in the circuit marked with an "X" is

- ☐ a regulated DC voltage.
- ☐ a pulsating DC voltage.
- ☐ an unregulated DC voltage.
- ☐ a sinewave.

9. If the mains voltage increases, the voltage at "X" (with respect to common)

- ☐ decreases.
- ☐ increases.
- ☐ remains unchanged.

10. The voltage at the point in the circuit marked with a "Y" is

- ☐ a regulated DC voltage.
- ☐ a pulsating DC voltage.
- ☐ an unregulated DC voltage.
- ☐ a sinewave.

11. If the mains voltage decreases, the voltage at "Y" (with respect to common)

- ☐ decreases.
- ☐ increases.
- ☐ remains unchanged.

12. If the mains voltage increases, the voltage at "X" with respect to "Y"

- ☐ decreases.
- ☐ increases.
- ☐ remains unchanged.

 Copyright: Not to be reproduced without permission

13. Assuming the zener diode is ideal, if the mains voltage decreases, the voltage at "Z" (with respect to common)

    ☐ decreases.
    ☐ increases.
    ☐ remains unchanged.

14. If the mains voltage increases, the power dissipated by *Q1*

    ☐ decreases.
    ☐ increases.
    ☐ remains unchanged.

15. If the mains voltage decreases, the power dissipated by the load

    ☐ decreases.
    ☐ increases.
    ☐ remains unchanged.

16. If the load resistance increases, the voltage at "Y" (with respect to common)

    ☐ decreases.
    ☐ increases.
    ☐ remains unchanged.

17. If the load resistance decreases, the voltage at "X" with respect to "Y"

    ☐ decreases.
    ☐ increases.
    ☐ remains unchanged.

18. If the load resistance increases, the power dissipated by *Q1*

    ☐ decreases.
    ☐ increases.
    ☐ remains unchanged.

19. Which of the following statements is correct?

- ☐ The voltage at "Z" must be at least 2V bigger than the voltage at "Y"
- ☐ The voltage at "X" must be at least 2V smaller than the voltage at "Y"
- ☐ The voltage at "Z" must be at least 2V smaller than the voltage at "Y"
- ☐ The voltage at "X" must be at least 2V bigger than the voltage at "Y"

Questions 20 to 27 refer to the circuit in Figure 2 below

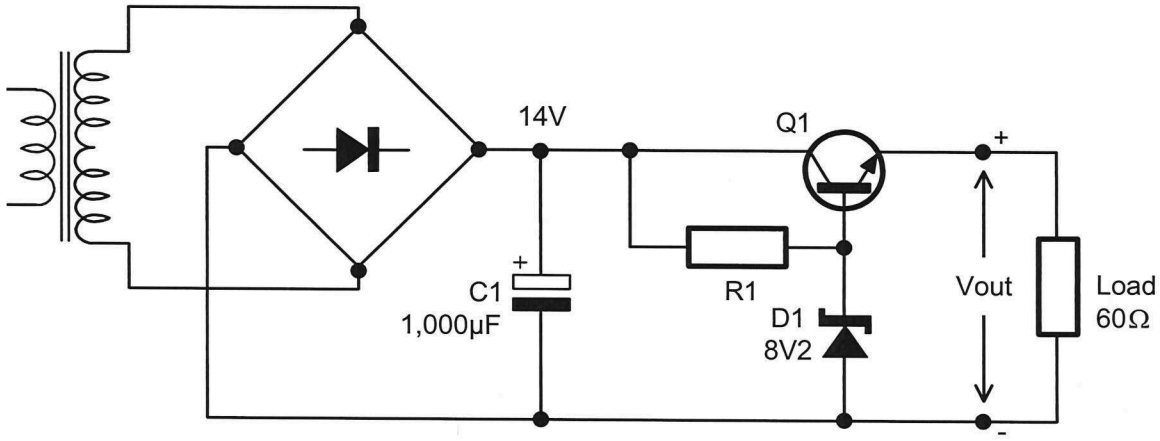

Figure 2

20. What is the voltage on the base of the pass transistor ($V_{B(Q1)}$)?

21. Calculate the circuit's output voltage (*Vout*).

22. Calculate the load current (I_{RL}).

 Copyright: Not to be reproduced without permission

23. Calculate the power dissipated by the load (P_{RL}).

24. Calculate the power dissipated by the pass transistor (P_{Q1}).

25. What is an appropriate *preferred resistor value* that can be used for *R1* if the diode's nominal operating current ($I_{D1(IZT)}$) is 7mA?

Questions 26 to 28 refer to the circuit in Figure 3 below

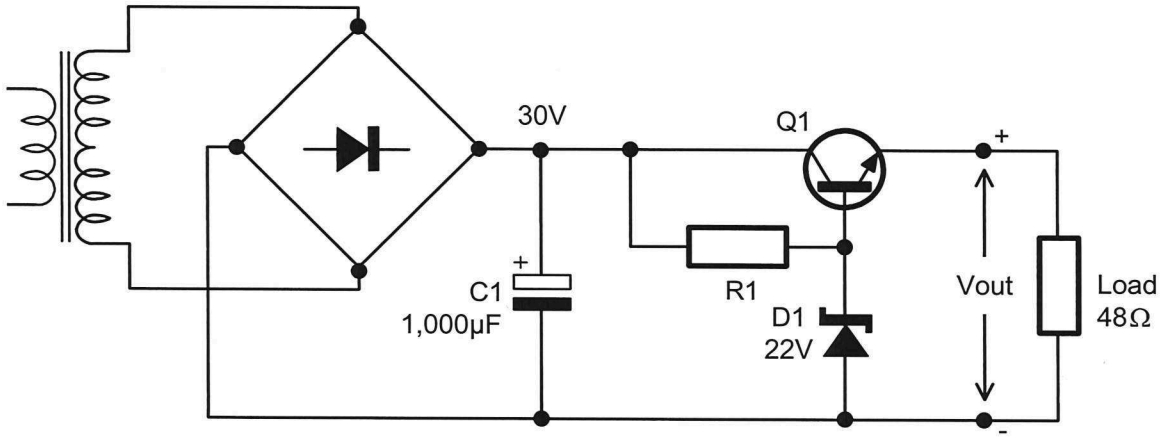

Figure 3

26. Calculate the minimum power rating necessary for the pass transistor.

27. Calculate the power that the pass transistor would dissipate if the unregulated DC input voltage was the minimum allowable amount for proper circuit operation.

 Copyright: Not to be reproduced without permission

28. What effect would reducing the power dissipated by the pass transistor in this way have on the circuit's efficiency?

_____

_____

Questions 29 and 30 refer to the circuit in Figure 4 below

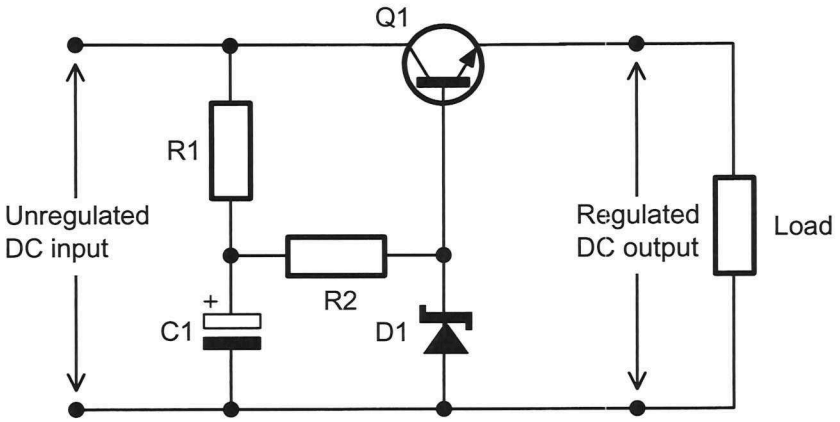

Figure 4

29. What is the purpose of the capacitor *C1*?

_____

_____

30. Using a *temperature compensated zener diode* or a *bandgap reference diode* for *D1* instead of a normal zener diode improves the circuit's

- ☐ load regulation.
- ☐ line regulation.
- ☐ load and line regulation.

Section 2 Fault-finding the voltage divider biased BJT series regulator

Purpose To develop your ability to locate a faulty component in faulty open-loop series regulator circuits.

Objectives At the end of this section you should be able to:

- List the typical faults that components in a voltage divider biased BJT series regulator can experience
- State the effect of typical faults that a voltage divider biased BJT series regulator
- Use typical test equipment to observe the effects of common faults on the voltages and currents around the circuit of a voltage divider biased BJT series regulator

 Copyright: Not to be reproduced without permission

Introduction

You have already learnt about fault-finding BJT amplifier circuits and, in many regards, fault-finding BJT series regulator circuits is identical. This chapter has been written to show you this.

Component faults

To be able to effectively fault-find any electronics circuit, it's important to have a clear understanding of the majority of faults that the components in the circuit can have. Below is a list of the most common faults experienced by the components in BJT series regulator circuits. Of course, other faults are possible but they represent a small minority and so they're not dealt with here.

Component	Typical faults
Low power resistors	■ High in value ■ Open-circuit
Aluminium oxide electrolytic caps	■ Open-circuit ■ Leaky
Tantalum oxide electrolytic caps	■ Short-circuit
Zener diodes	■ Open-circuit anode-cathode ■ Short-circuit anode-cathode
Transistors (BJTs)	■ Short-circuit collector-emitter ■ Short-circuit base-emitter ■ Short-circuit base-collector ■ Open-circuit collector ■ Open-circuit base ■ Open-circuit emitter

Voltage divider biased BJT series regulator faults

Before discussing BJT series regulator faults, an important point needs to be made. It's unrealistic to expect to be able to simply remember these faults and their effects. So this isn't the purpose of the following notes. Instead, they've been written to help you appreciate the interaction of the components' failures and their effects on the way the circuit works. This will help you fault-find more complex circuits and/or help you identify problems caused by less common component failures.

Figure 1 below shows a series regulator with a 15V unregulated DC input voltage and a 12V6 zener diode. This means that the regulated DC output voltage (ie the potential difference across the load) is 12V (notwithstanding component tolerances/variations). The following fault descriptions are based on this circuit. The values of the resistor *R1* and the load are irrelevant to this discussion and so are not given.

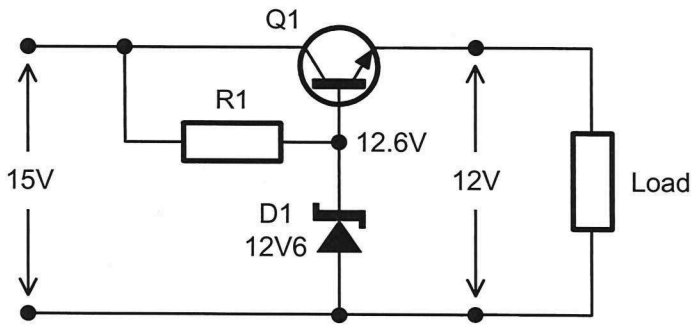

Figure 1

 Copyright: Not to be reproduced without permission

- *R1* high

If *R1* were to go high by a relatively small amount, say 50%, there's every chance that the circuit would continue to work correctly. That's because the current through *R1* would likely still be sufficiently high to bias the zener diode and forward bias the transistor.

However, if *R1* were to go sufficiently high in value, but not too high in value (say, not higher than 10MΩ), the zener diode would be starved of the minimum current it needs to operate and so would no-longer conduct in the reverse direction and would become an open-circuit. That said, there would still be sufficient current to turn *Q1* on so the circuit would effectively become base bias (but with an emitter resistor) instead of voltage divider biasing. The conditions around the faulty circuit are shown in Figure 2 below.

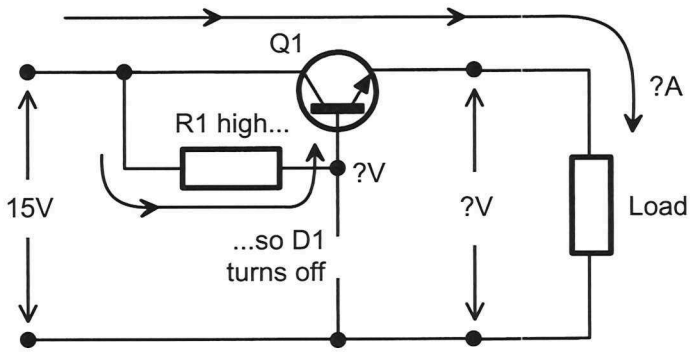

Figure 2

What happens to the key voltages around the circuit are impossible to predict without circuit analysis tools that you haven't been taught. Moreover, these voltages are affected by the value that *R1* changes to and the resistance of the load. So, even with circuit analysis tools, the voltages would still be problematic to predict.

However, qualitative predictions *can* be made. With *R1* high in value, the transistor's base current would be small and so the transistor would continue to operate in its linear mode. Now, excepting for a remarkable fluke of circumstances (ie *R1* were to go up to a particular value and the load happens to be a particular resistance), the output voltage would definitely no-longer be the value that it's supposed to be (12V in the example of this circuit) - It could go up but could also go down. Importantly though, the transistor's base voltage would still be 0.6V higher than its emitter voltage.

In addition, the circuit would also lose both load and line regulation. So, whatever happens to the output voltage, it would change as mains changes and as the load resistance changes. The mains voltage changes by small amounts continuously so you probably would notice load voltage changing by small amounts continuously too. And if you varied the load resistance (by varying the operation of the equipment, say by changing the volume if it was a portable stereo) you would notice larger variations in the load voltage as you did so.

- *R1* open-circuit

If *R1* were to go open-circuit there is no-longer a path for current to flow through the zener diode and into the base of the transistor. This means that both devices will turn off.

Obviously, with *Q1* turned off, there would no-longer be a current path from its collector to the emitter and so both the output voltage and current would drop to zero. The conditions around the faulty circuit are shown in Figure 3 below.

Interestingly, the junction where *R1* meets the zener diode and transistor would not be electrically connected to any other point in the circuit because all paths would be open circuit. This means that, when you measure the pass transistor's base voltage, you wouldn't read 0V. Instead, you would read a value near 0V that bounces around +/- tens and even hundreds of millivolts and so this junction is said to be "floating". The effect on the digital voltmeter is identical to what you would see if you left the probes lying on the bench not teaching each other.

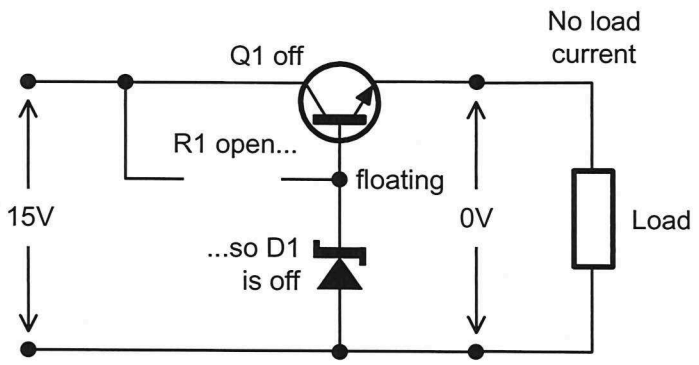

Figure 3

 Copyright: Not to be reproduced without permission

- *D1* open-circuit

If *D1* were to go open-circuit, the circuit would become base biased (but with an emitter resistor) instead of voltage divider biased. This is because there is still a current path from the collector to the base via *R1*.

Having an emitter resistor in a base bias circuit complicates the circuit analysis and so you haven't been taught how to do that. However, we can predict what would happen qualitiatively and the effects are different to what would happen if *R1* were to go high causing the zener diode to turn off..

That's because *R1* is still 560Ω and so there would be a much larger current into the base of the pass transistor that would likely drive it into saturation. This means that the transistor's emitter voltage (which is the circuit's output voltage) would be only one or so volts less than the input voltage and the transistor's base voltage would be 0.6V higher than that. The conditions around the faulty circuit are shown in Figure 4 below.

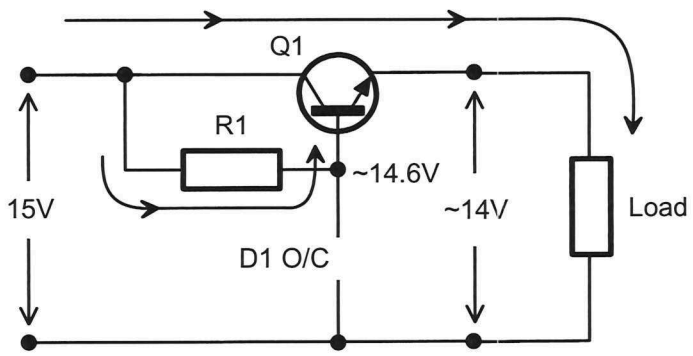

Figure 4

Students sometimes struggle to identify this fault because if feels counter-intuitive for the voltage across an open-circuit to go up. But *R1* and *D1* are connected in series and, if you remember your fault-finding principles with series resistive circuits, an open-circuit resistor is the biggest resistor in the circuit and so has the greatest share of the applied voltage across it.

- *D1* short-circuit

If *D1* were to go short-circuit the pass transistor would turn off because all of the current through *R1* would be shunted directly to ground leaving nothing for the transistor's base. In turn, this would open the connection from the circuit's input to its output (ie from collector to emitter) and so there would is no output current or voltage. The conditions around the faulty circuit are shown in Figure 5 below.

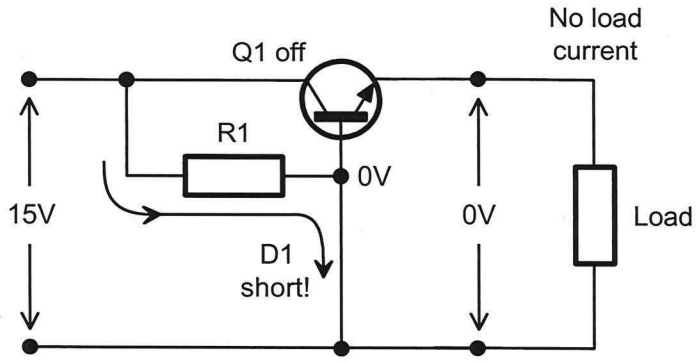

Figure 5

- *Q1* base open-circuit

If the base of *Q1* were to go open-circuit no current could flow into the base and so the pass transistor would turn off, opening the connection between the circuit's input and its output. This would cause the output voltage and current to drop to zero.

Importantly, the voltage on the transistor's base would still be a value you would expect for a 12V6 zener diode because all of the current through *R1* would flow through the zener diode (which would easily cope with the small increase). The conditions around the faulty circuit are shown in Figure 6 below.

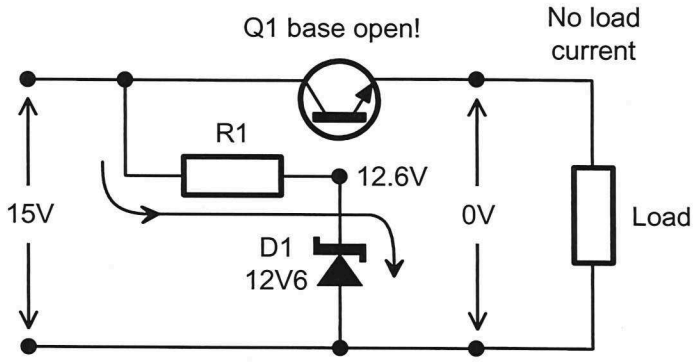

Figure 6

 Copyright: Not to be reproduced without permission

- *Q1* collector open-circuit

If the collector of *Q1* were to go open-circuit there would no-longer be a path from the circuit's input to its output. But, in this case, the output voltage and current would not drop to zero.

To explain, with the pass transistor turned off on account of its open-circuit collector, its tempting to think the circuit would resemble a shunt regulator and, on paper, it would. But *R1* in the design of this circuit would almost certainly be set to a value so that the current through it is only sufficient for the needs of the zener diode and the transistor's base current (which would be about one tenth of the load current because of the transistor's beta, or current gain).

As the load needs ten or more times the transistor's base current, it would steal all of the current through *R1* leaving nothing for the zener diode and so the zener diode would turn off. This means that the circuit becomes a simple series circuit consisting of *R1*, the transistor's base-emitter p-n junction and the load.

That being the case, the load voltage would be a function of the size of the load resistance which, being smaller than the value of *R1* (because it needs more current than is flowing through *R1*), would cause the load voltage to drop. It would also become unregulated. Importantly, the voltage on the transistor's base would still be 0.6V greater than whatever the load voltage is. The conditions around the faulty circuit are shown in Figure 7 below.

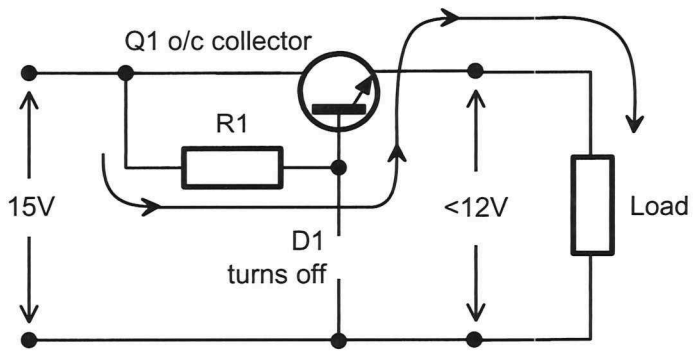

Figure 7

- *Q1* collector-emitter short-circuit

If the collector-emitter pins of *Q1* were to become short-circuit, there would be a very low resistance connection between the circuit's input and its output. This means that the output voltage would go up to the circuit's input voltage. In addition, the load voltage would become unregulated.

This fault is easy to identify because the voltages on the pass transistor's collector and emitter pins would be the same as each other which is never the case with transistors that are not faulty. The conditions around the faulty circuit are shown in Figure 8 below.

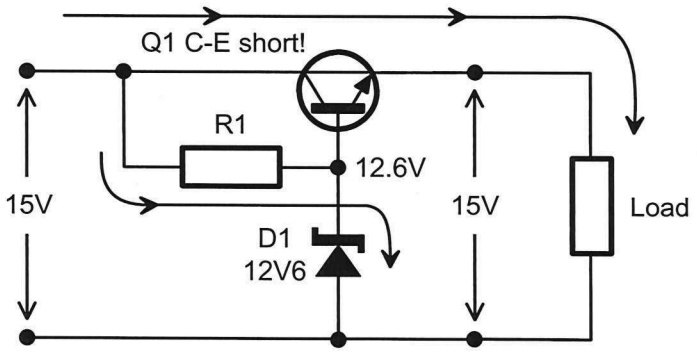

Figure 8

With that said, as the load is connected directly to the output of the unregulated supply, it will likely pull that voltage down. In other words, the input and output voltages are likely to be something smaller than 15V (though, still the same as each other).

 Copyright: Not to be reproduced without permission

- *Q1* base-emitter short-circuit

If the base-emitter junction of *Q1* were to become short-circuit the pass transistor would turn off and so there would be no connection from the circuit's input to its output via the transistor's collect-emitter.

As the load normally needs up to ten times the transistor's base current, it would steal all of the current through *R1* leaving nothing for the zener diode and so the zener diode would turn off. This would mean that the circuit would become a series circuit consisting of *R1* and the load.

That being the case, the load voltage would be a function of the size of its resistance which, being smaller than the value of *R1* (because it needs more current than is flowing through *R1*), would cause the load voltage to drop. It would also become unregulated. Importantly, the voltage on the transistor's base would be the same as the voltage on its emitter. The conditions around the faulty circuit are shown in Figure 9 below.

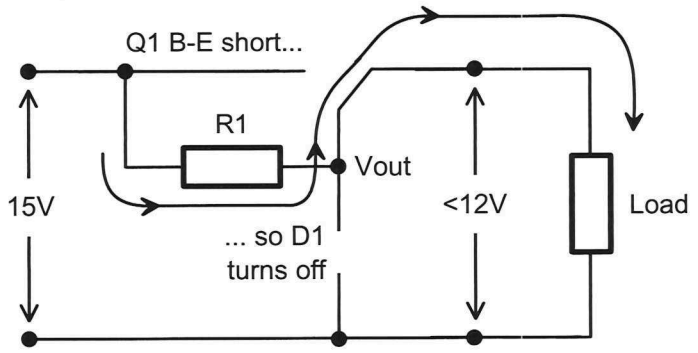

Figure 9

Finally, let's consider the effects of problems with a capacitor on the circuit below (Figure 10). Recall that the capacitor is used together with the extra resistor to minimise the effects of line transients on the load voltage.

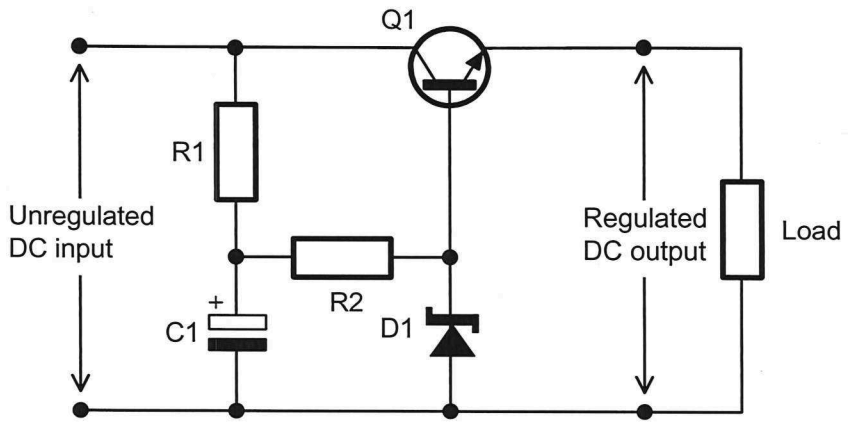

Figure 10

- C1 leaky

  A leaky capacitor behaves as though it has a resistor connected in parallel with it. This prevents the capacitor from charging up as much as it would normally and so it effectively behaves as though its a capacitor with lower value (like, a 10μF is only a 1μF instead).

  If the capacitor is not too leaky then this will reduce its effectiveness in preventing any line transients. However, if it is very leaky, then it may prevent sufficient current flowing through the zener diode to turn it on. In which case, the circuit behaves as though the zener diode is open-circuit but probably with a lower voltage on the base of the pass transistor.

- C1 open-circuit

  Open-circuit capacitors behave as though they're effectively no-longer in the circuit. This won't have an affect on the DC conditions around the circuit nor affect the performance of any of the other components. However, the transient rejection that the capacitor is designed to provide is no-longer present.

Copyright: Not to be reproduced without permission

Student notes

Skill practice 2

Practise measuring potential differences around a voltage divider biased BJT series regulator with simulated faults

This exercise is practise for the sorts of skills you may be required to perform in a practical test. Remember, in any practical tests you will be working alone so make sure that you can perform all the steps. It should take you about 1¼ hours to complete this exercise.

Equipment

- prototyping panel
- 15V AC power supply
- two DMM
- unregulated power supply module
- BD139
- 15V 400mW zener diode
- 560Ω ¼W resistor
- 1kΩ ¼W resistor
- 47kΩ ¼W resistor
- banana leads
- hook-up wire
- wire strippers

Pinout data

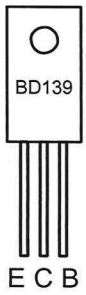

Plastic side facing you

Remember:

Follow TAFE NSW WHS guidance at all times!

 Copyright: Not to be reproduced without permission

Work tasks

1. Read your WHS responsibilities at the top of the form below. Then conduct a WHS risk assessment and record your findings in the space provided.

Responsibilities of students under the Model WHS Act: s28

- Take reasonable care for your own health and safety by working safely at all times
- Take reasonable care to ensure that your acts or omissions don't put the health and safety of others at risk
- Follow all TAFE NSW WHS guidance and comply with all reasonable instructions from TAFE NSW staff to assist them in complying with the TAFE NSW WHS requirements
- In addition to the above, you must:
  - use and maintain machinery, tools and all other equipment properly and safely
  - ensure that your work area is free of hazards
  - notify a TAFE NSW staff member of actual or potential hazards
  - wear/use prescribed safety equipment
  - take notice of any safety signs and adhere to their instructions

Risks involved in this activity include:	**Control measures:**
Trip hazards (eg students bags) Objects dropped on feet (while equipment is taken to and from workbenches).	Move bags and other objects from walkways Plan lifting of equipment
Others: _____	Other: _____
_____	_____
_____	_____

My signature here indicates that I have read and understand my responsibilities under the Model WHS Act s28 (detailed above). I have also conducted a risk assessment before undertaking this activity and have identified measures to control these risks and have implemented them.

Signature: _____ Date: _____

2. Gather the equipment needed for this exercise.

3. Wire the circuit of Figure 1 on the prototyping panel.

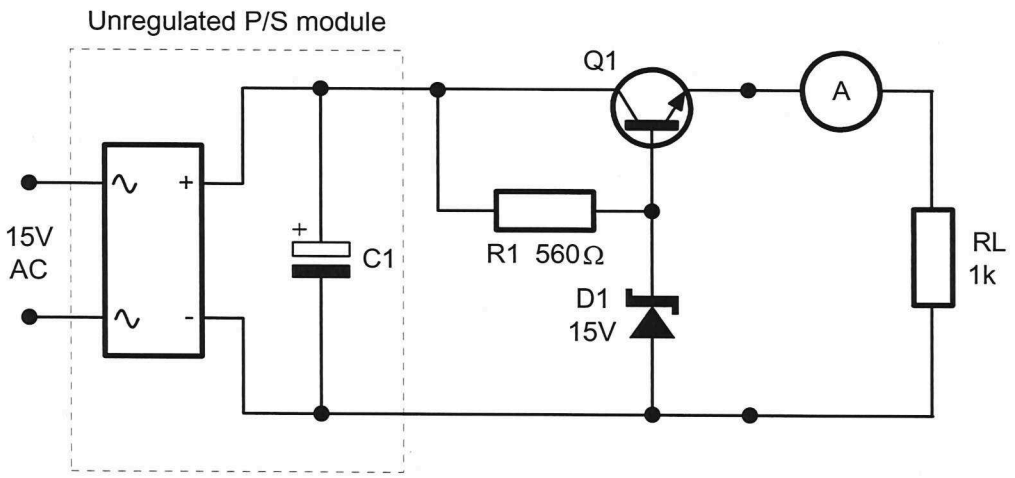

Figure 1

4. Turn on the AC power supply and verify that the circuit is working correctly.

   Self check: If your circuit is working correctly, you should measure an output voltage of about 14V and a output current (ie a load current) of about 14mA.

5. Measure the voltage on the collector, base and emitter of the pass transistor (with respect to common) and record these voltages in Table 1 below.

6. Record the measured output current.

   Note: These measurements show you what the voltages and current are in a working circuit so that you can appreciate the changes to them when you simulate a variety of faults.

Table 1	$V_{C(Q1)}$	$V_{B(Q1)}$	$V_{E(Q1)}$	Iout
No faults				

The teacher needs to check your work at this point...

 Copyright: Not to be reproduced without permission

7. Simulate the collector-emitter of the pass transistor (*Q1*) having gone short-circuit by connecting a link (ie a short piece of hook-up wire) between its collector and emitter leads.

8. Remeasure the voltages and output current and record these Table 2 below.

Table 2	$V_{C(Q1)}$	$V_{B(Q1)}$	$V_{E(Q1)}$	Iout
Q1 collector-emitter short-circuit				

Question 1
You know what the fault is but let's imagine for a moment that you don't. Two of the measurements above indicate exactly which component is faulty and what's wrong with it. Which two measurements are they and what is it about them that does this?

_____

_____

_____

The teacher needs to check your work at this point...

9. Remove the link that's shorting the pass transistor's collector and emitter leads.

10. Simulate the base-emitter of the pass transistor having gone short-circuit by connecting the link between its base and emitter leads.

11. Remeasure the voltages and output current and record these Table 3 below.

Table 3	$V_{C(Q1)}$	$V_{B(Q1)}$	$V_{E(Q1)}$	Iout
Q1 base-emitter short-circuit				

Question 2
Again, let's imagine that you don't know what the fault is. Two of the measurements above indicate exactly which component is faulty and what's wrong with it. Which two measurements are they and what is it about them that does this?

_____

_____

_____

The teacher needs to check your work at this point...

 Copyright: Not to be reproduced without permission

12. Remove the link that's shorting the pass transistor's base and emitter leads.

13. Simulate the base of the pass transistor having gone open-circuit by removing the transistor, gently bending the base leg so that it's horizontal to the transistor's body, then putting the transistor back in the circuit.

14. Remeasure the voltages and output current and record these Table 4 below.

Table 4	$V_{C(Q1)}$	$V_{B(Q1)}$	$V_{E(Q1)}$	Iout
Q1 base open-circuit				

Question 3
Two of the measurements above indicate exactly which component is faulty and what's wrong with it. Which two measurements are they and what is it about them does this?

_____

_____

_____

The teacher needs to check your work at this point...

15. Remove the pass transistor and straighten the base leg **but don't** put the transistor back it the circuit yet.

16. Simulate the collector of the having gone open-circuit by gently bending the collector leg so that it's horizontal then put the transistor back in the circuit.

17. Remeasure the voltages and output current and record these Table 5 below.

Table 5	$V_{C(Q1)}$	$V_{B(Q1)}$	$V_{E(Q1)}$	Iout
Q1 collector open-circuit				

18. Remove the pass transistor and straighten the collector base then put the transistor back in the circuit.

19. Simulate *R1* having gone high by replacing it with the 47kΩ resistor.

20. Remeasure the voltages and output current and record these Table 6 below.

Table 6	$V_{C(Q1)}$	$V_{B(Q1)}$	$V_{E(Q1)}$	Iout
R1 high				

Question 4
These two faults are difficult to tell apart. What is it about the measurements in the two tables above that make it so difficult?

_____

_____

_____

The teacher needs to check your work at this point...

 Copyright: Not to be reproduced without permission

21. Remove the 47kΩ resistor and return the original *R1* (ie the 560Ω resistor) to the circuit.

22. Simulate *D1* having gone open-circuit by disconnecting one of its legs from the circuit.

23. Remeasure the voltages and output current and record these Table 7 below.

Table 7	$V_{C(Q1)}$	$V_{B(Q1)}$	$V_{E(Q1)}$	Iout
D1 open-circuit				

Question 5
At first glance, you may be tempted to think that this fault is indistinguishable from the previous two but that's not true. To understand why, work out which of the following statements is true then call the teacher to check your answer before answering Q 6 & Q7.

☐ The transistor's V_{CE} indicates that the transistor is cut-off.

☐ The transistor's V_{CE} indicates that the transistor is operating in its linear region.

☐ The transistor's V_{CE} indicates that the transistor is saturated.

Question 6
Why does the transistor's mode of operation immediately rule-out the possibility that the pass transistor's collector is open-circuit?

_____

_____

Question 7
Why does the transistor's mode of operation immediately rule-out the possibility that *R1* has gone high?

_____

_____

The teacher needs to check your work at this point...

24. Reconnect the leg of *D1* that you disconnected so that the diode is back in the circuit.

25. Simulate *D1* having gone short-circuit by using a short length of hook-up wire to connect its two leads together.

26. Remeasure the voltages and output current and record these Table 8 below.

Table 8	$V_{C(Q1)}$	$V_{B(Q1)}$	$V_{E(Q1)}$	Iout
D1 short-circuit				

Question 8
Which one of the following statements is true?

☐ The transistor is cut-off.

☐ The transistor is operating in its linear region.

Question 9
What voltage is the direct cause of the transistor being operating in the condition you identified for the question above? Explain why it does.

_____

_____

_____

Question 10
Why do V_C **and** V_B suggest that *D1* is short-circuit?

_____

_____

_____

The teacher needs to check your work at this point...

 Copyright: Not to be reproduced without permission

27. Remove the short-circuit across *D1*.

28. Simulate *R1* having gone open-circuit by removing the 560Ω resistor.

29. Remeasure the voltages and output current and record these Table 9 below.

Table 9	$V_{C(Q1)}$	$V_{B(Q1)}$	$V_{E(Q1)}$	Iout
R1 open-circuit				

Question 11
These measurements should be very similar to the ones in Table 8. But, one is subtly different. Which one is different and what's different about it?

_____

_____

_____

Question 12
Why does this measurement behave the way it does?

_____

_____

_____

The teacher needs to check your work at this point...

Review questions

Answer these questions to check your understanding of what you have learnt for this chapter. Doing this will also help to prepare you for the tests.

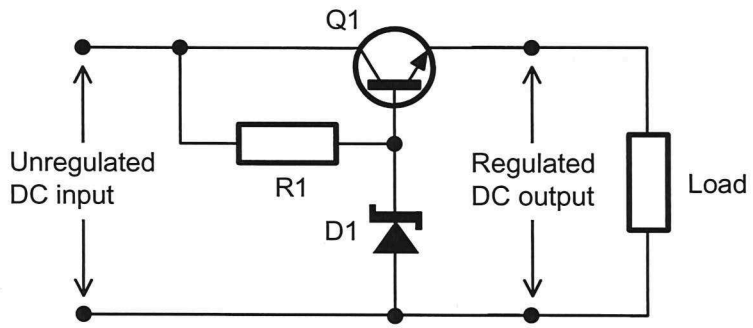

Figure 1

1. Complete Table 1 below by stating whether the voltages on the legs of the pass transistor in Figure 1 above increase, decrease, floats or stay the same for the faults listed. The first one has been done for you as an example.

Table 1

Fault	$V_{C(Q1)}$	$V_{B(Q1)}$	$V_{E(Q1)}$
Open-circuit emitter on Q1	Stays the same	Stays the same	Decreases
Open-circuit collector on Q1			
R1 high			
Short-circuit collector-emitter on Q1			
Short-circuit D1			
Open-circuit R1			
Open-circuit base on Q1			
Open-circuit D1			
Short-circuit base-emitter on Q1			

Copyright: Not to be reproduced without permission

Student notes

Section 3 Series regulator circuits with closed-loop control using BJT error amplification

Purpose To develop your ability to locate a faulty component in faulty series regulators with closed loop control using BJT error amplification.

Objectives At the end of this section you should be able to:

- Explain the purpose of series regulators with closed-loop control using error amplification
- Recognise the circuit of a series regulator with BJT error amplification (fixed and variable output)
- Describe the function of every component in a series regulator with BJT error amplification (fixed and variable output)
- Predict the voltages around the circuit of a series regulator with BJT error amplification (fixed and variable output)
- Locate simulated faults in a series regulator with BJT error amplification
- Use typical test equipment to locate faulty components in a series regulator circuits with closed loop control using BJT error amplification.

 Copyright: Not to be reproduced without permission

Introduction

Despite the relatively good level of load regulation that the series regulator discussed in Sections 1 and 2 provides (when compared with shunt regulation), the circuit is pretty basic compared to the regulators in most electronics equipment. These series regulators usually have closed loop control that amplifies changes in output voltage (called "errors") to facilitate a sharper correction response thereby improving their load regulation performance. This section deals with the first of two such circuits (Section 4 deals with the second circuit).

The series regulator with a BJT error amplification for closed loop control

Figure 1 below shows the circuit of the simple series regulator discussed in Sections 1 and 2 but with the inclusions of global negative feedback via resistors *R3*, *R4* and the transistor *Q2*. These extra components implement *error amplification* to obtain closed loop control and improve the series regulator's load regulation.

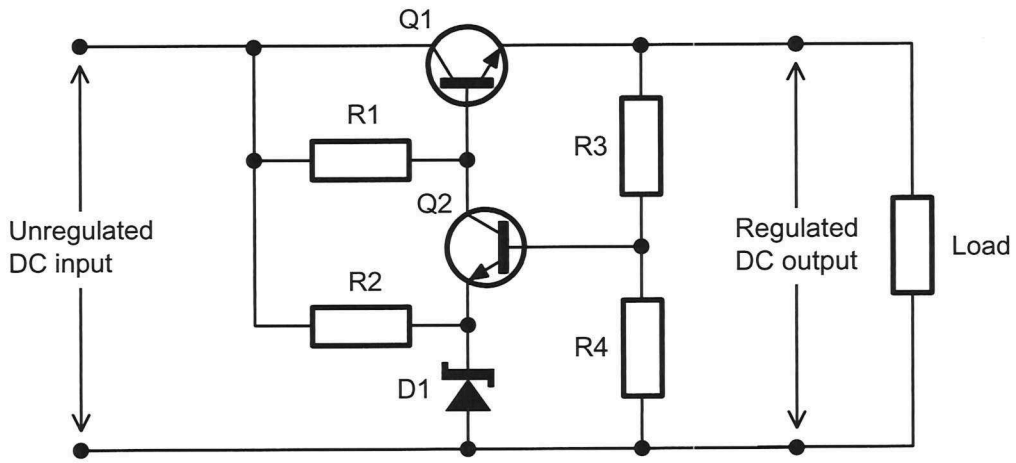

Figure 1 *Series regulator with BJT error amplification*

To explain how load regulation is improved, let's consider what happens around the circuit if the load's resistance goes down:

- If the load's resistance drops, the potential difference across it (and therefore the output voltage) would start to drop also because a smaller resistor has a smaller potential difference across it.
- As *R3* and *R4* are connected in parallel with the output/oad, the drop in load voltage produces a corresponding drop in the potential differences across *R3* and *R4*.
- A drop in the potential difference across *R4* means that the voltage at the base of *Q2* ($V_{B(Q2)}$) drops also.
- However, the voltage on the emitter of *Q2* ($V_{E(Q2)}$) is fixed by the zener diode. That being the case, the drop in $V_{B(Q2)}$ results in a drop in base-emitter voltage of *Q2* ($V_{BE(Q2)}$).

- A drop in ($V_{BE(Q2)}$) forward biases *Q2* less and, as you may recall from an earlier amplifiers unit, this causes the collector voltage of *Q2* ($V_{C(Q2)}$) to go up.
- As the collector of *Q2* is connected to the base of the pass transistor, if $V_{C(Q2)}$ goes up then $V_{B(Q1)}$ goes up too.
- With that, the voltage on the emitter and base of the pass transistor ($V_{B(Q1)}$ and $V_{E(Q1)}$) are moving in opposite directions. $V_{E(Q1)}$ is going down because of the drop in load voltage and $V_{B(Q1)}$ is going up as a result of that.
- The net effect of this is a bigger increase in the base-emitter voltage of the pass transistor ($V_{BE(Q1)}$) for the same change in load resistance than there would have been without *Q2* in the circuit. This turns the pass transistor on more increasing its collector current and hence the load current.
- This causes the potential difference across the load to increase back to the correct level.

Importantly, the inclusion of *Q2* makes errors on the output seem bigger to the pass transistor than they really are. It does so because a change in output voltage results in a proportionally greater change across the pass transistor's base-emitter junction and it's for this reason that *Q2* is called an error amplifier. Making the error on the output look bigger than it really is to the pass transistor forces it to correct the error more sharply. This in turn improves the circuit's load regulation performance.

 Copyright: Not to be reproduced without permission

Predicting key voltages around the circuit

Naturally, you're expected to be able to analyse circuits like the one shown in Figure 1 to predict voltages at key points. As the potential difference across the zener diode is fixed (ideally) this gives a very handy starting point for doing so.

1 Determine the voltage on the emitter of *Q2* ($V_{E(Q2)}$):

$$V_{E(Q2)} = V_{REF} \qquad \text{Where: } V_{REF} = V_{D1}$$

2 Use $V_{E(Q2)}$ to determine the voltage on the base of *Q2* ($V_{B(Q2)}$):

$$V_{B(Q2)} = V_{E(Q2)} + 0.6V$$

3 Use $V_{B(Q2)}$ to calculate the output voltage. This is a three-step process:

First, calculate the current through *R4* (I_{R4}). To do so, realise that the potential difference across *R4* (V_{R4}) is the same as $V_{B(Q2)}$. That being the case:

$$I_{R4} = \frac{V_{B(Q2)}}{R4}$$

Next, use I_{R4} to calculate the potential difference across *R3* (V_{R3}). To do so, realise that the current through *R3* (I_{R3}) is the same as the current through *R4* (I_{R4}). That being the case:

$$V_{R3} = I_{R4} \times R3$$

Finally, find the output voltage (*Vout*). To do so, realise that the output voltage is the same as the sum of the potential differences across *R3* and *R4*:

$$Vout = V_{R3} + V_{R4}$$

4 Use *Vout* to calculate the voltage on the base of the pass transistor ($V_{B(Q1)}$). This also happens to be the voltage on the collector of *Q2* ($V_{C(Q2)}$).

$$V_{C(Q2)} = V_{B(Q1)} = Vout + 0.6V$$

Calculating the power dissipated by the pass transistor

In some situations you may need to know the power dissipated by the pass transistor which is calculated using the equation:

$$P_{Q1} = V_{CE(Q1)} \times I_{RL}$$

Choosing an appropriate value for *R2*

An appropriate value for *R2* which is calculated using the equation:

$$R2 = \frac{Vin_{(unregulated)} - V_{D1}}{I_{D1(I_{ZT})}}$$

 Copyright: Not to be reproduced without permission

Let's put this analysis into practise.

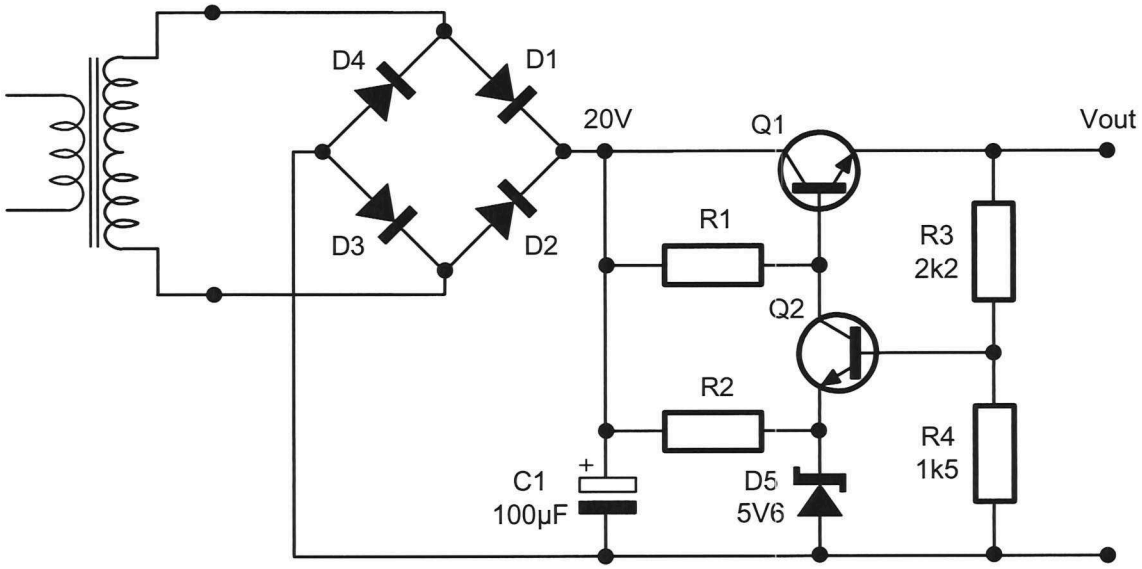

Figure 2

First, determine the voltage on the emitter of *Q2*.

$$V_{E(Q2)} = V_{REF}$$

$$V_{E(Q2)} = 5.6V$$

Then determine the voltage on the base of *Q2*.

$$V_{B(Q2)} = V_{E(Q2)} + 0.6V$$

$$V_{B(Q2)} = 5.6V + 0.6V$$

$$V_{B(Q2)} = 6.2V$$

Then calculate the output voltage. Remember, this is a three-step process:

$$I_{R4} = \frac{V_{B(Q2)}}{R4}$$

$$I_{R4} = \frac{6.2V}{1.5k\Omega}$$

$$I_{R4} = 4.13mA$$

$$V_{R3} = I_{R4} \times R3$$

$$V_{R3} = 4.13mA \times 2.2k\Omega$$

$$V_{R3} = 9.1V$$

$$Vout = V_{R3} + V_{R4}$$

$$Vout = 9.1V + 6.2V$$

$$Vout = 15.3V$$

Next, calculate the voltage on the base of the pass transistor and the collector of the error amplifier.

$$V_{C(Q2)} = V_{B(Q1)} = Vout + 0.6V$$

$$V_{C(Q2)} = V_{B(Q1)} = 15.3V + 0.6V$$

$$V_{C(Q2)} = V_{B(Q1)} = 15.9V$$

 Copyright: Not to be reproduced without permission

Finally, calculate the power dissipated by the pass transistor for a load resistance of 50Ω.

$$V_{CE(Q1)} = V_{C(Q1)} - V_{E(Q1)}$$

$$V_{CE(Q1)} = 20V - 15.3V$$

$$V_{CE(Q1)} = 4.7V$$

$$I_{RL} = \frac{V_{RL}}{RL}$$

$$I_{RL} = \frac{15.3V}{50\Omega}$$

$$I_{RL} = 306mA$$

$$P_{Q1} = V_{CE(Q1)} \times I_{RL}$$

$$P_{Q1} = 4.7V \times 306mA$$

$$P_{Q1} = 1.44W$$

Practise using these equations by attempting the following questions for yourself.

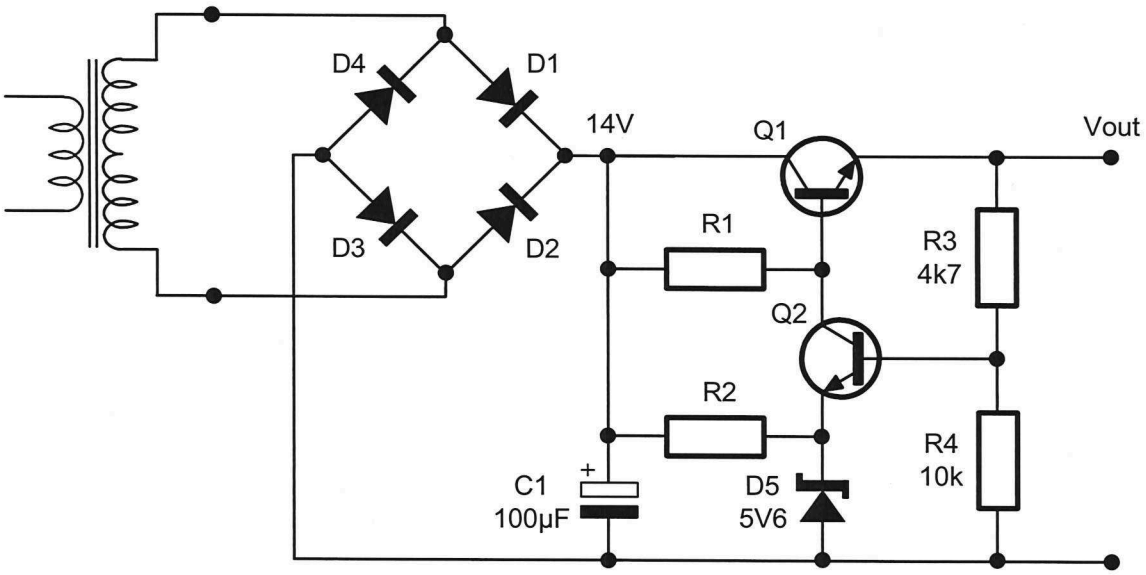

Figure 3

1 What is the voltage on the emitter of *Q2* ($V_{E(Q2)}$)?

2 Calculate the voltage on the base of *Q2* ($V_{B(Q2)}$).

3 Calculate the current through *R4* (I_{R4}).

 Copyright: Not to be reproduced without permission

4 Calculate the potential difference across *R3* (V_{R3}).

5 Calculate the output voltage (*Vout*).

6 Calculate the voltage on the base of the pass transistor ($V_{B(Q1)}$).

7 Calculate the power dissipated by the pass transistor (P_{Q1}) for a load resistance of 72Ω.

For reasons that are not immediately obvious and better explained using the variation of this circuit described in Section 4 (so, see Section 4 for more on this), there's a one-step method of calculating the output voltage for this regulator circuit. It involves using the equation below:

$$Vout = V_{B(Q2)} \times \left(\frac{R3}{R4} + 1\right)$$

Practise using this equation to calculate the output voltage of the circuit in Figure 3 on page 3-9. You should obtain the voltage as your answer to Question 5 on page 3-10.

 Copyright: Not to be reproduced without permission

Generic block diagram of series regulators with error amplification

Devices other than a BJT can be used to provide the error amplification which means that there are many variations on this basic method of closed loop control. However, regardless of their differences, all of these types of circuits contain the blocks shown in the functional block diagram in Figure 4 below.

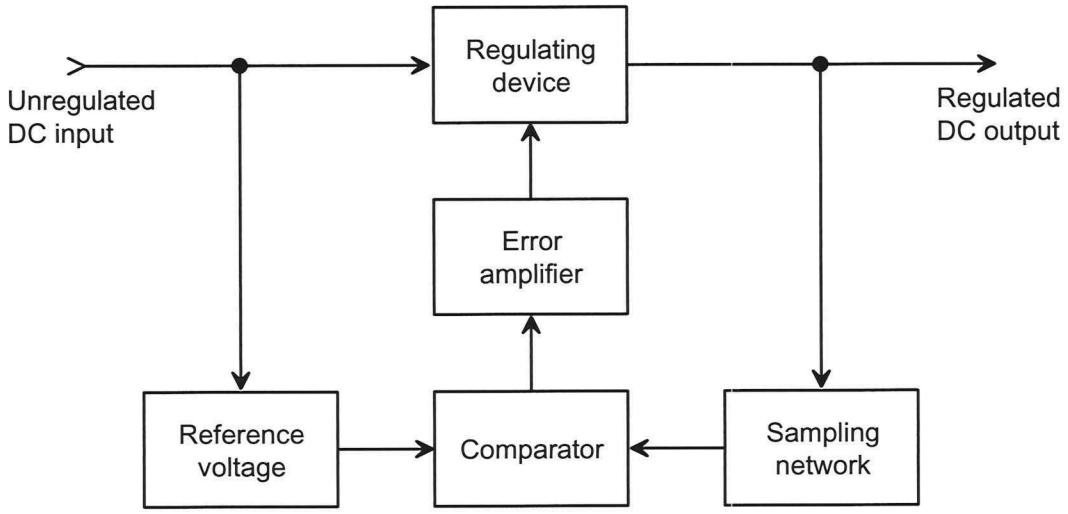

Figure 4 *The generic block diagram of series regulators with closed loop control using error amplification*

Figure 5 below shows which components in the series regulator with BJT error amplification belong to which functional block.

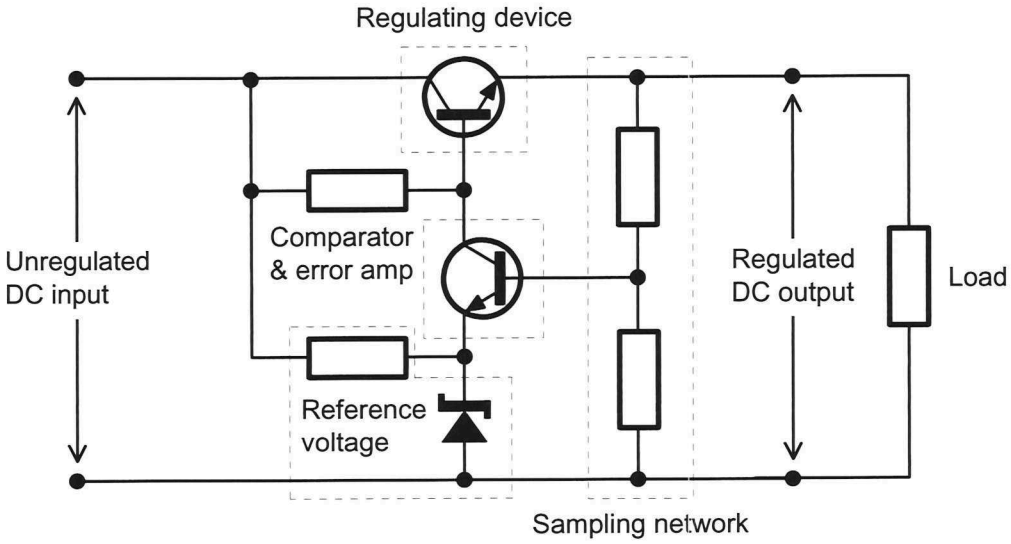

Figure 5 *The components in the series regulator with BJT error amplification and their relationship to the blocks in the functional block diagram in Figure 4*

This is a very handy block diagram to remember because, if you ever have to repair a series regulator design that you've never seen before, you can make sense of the circuit by identifying the components that implement the functions of each of the blocks. You will be asked to draw this block diagram in an assessment.

Improving the line regulation

It's the voltage reference block that provides the series regulator with closed-loop control with its line regulation and a standard zener diode does a satisfactory job in this regard.

For improved line regulation performance, a temperature compensated zener diode or "reference diode" can be used in its place. There isn't a special schematic symbol for reference diodes, nor do they look any different physically. So, when replacing the a faulty zener diode in the voltage reference circuit, you should use the part number to obtain its data to be sure that, if it's a reference diode, you replace it with another reference diode of comparable performance.

For even greater improvements in line regulation, a device called a *bandgap voltage reference* can be used in place of the zener diode. These are integrated circuits that, at a minimum, have three pins and so they're available in the TO-92 package as well as SOIC packages (ie SMDs). A special schematic symbol is sometimes used to represent these devices. Can you find an example online? It looks like a zener diode but with a third leg.

 Copyright: Not to be reproduced without permission

The series regulator with an adjustable output voltage

As you have seen, the size of output voltage of a series regulator with closed loop control depends on the size of the reference voltage and the values of the resistors in the sampling network. This allows the circuit's output voltage to be "programmed" to any value by choosing appropriate values for these components.

It also allows for the circuit's output voltage to be made variable. Examples of how this can be done are shown in Figure 6 and 7 below.

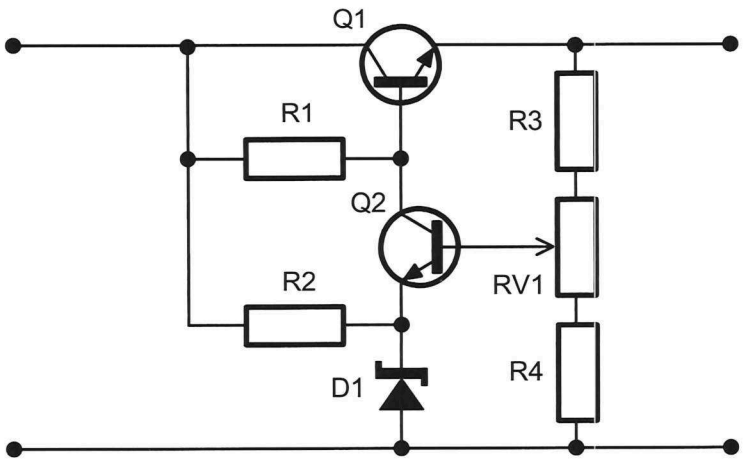

Figure 6 *Series regulator with BJT error amplification and an adjustable output*

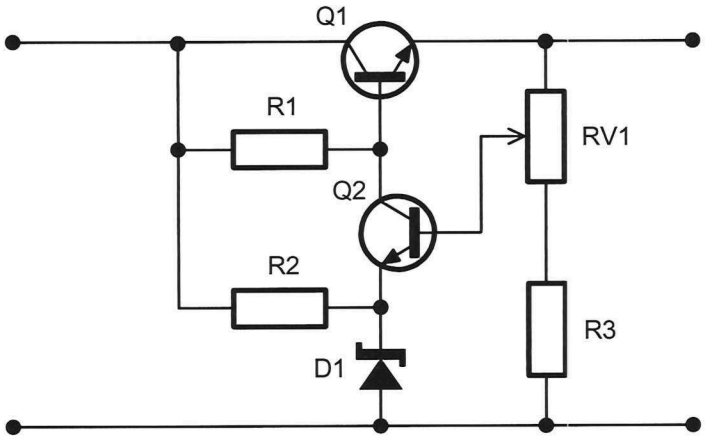

Figure 7 *Series regulator with BJT error amplification and an adjustable output*

When the potentiometer in these circuits is at the bottom of their travel, the output voltage is maximum because the resistance between the output and the base of *Q2* is biggest while the resistance between the base of *Q2* and common is smallest. This is shown in Figures 8 and 9 together with the equations for calculating the maximum output voltage.

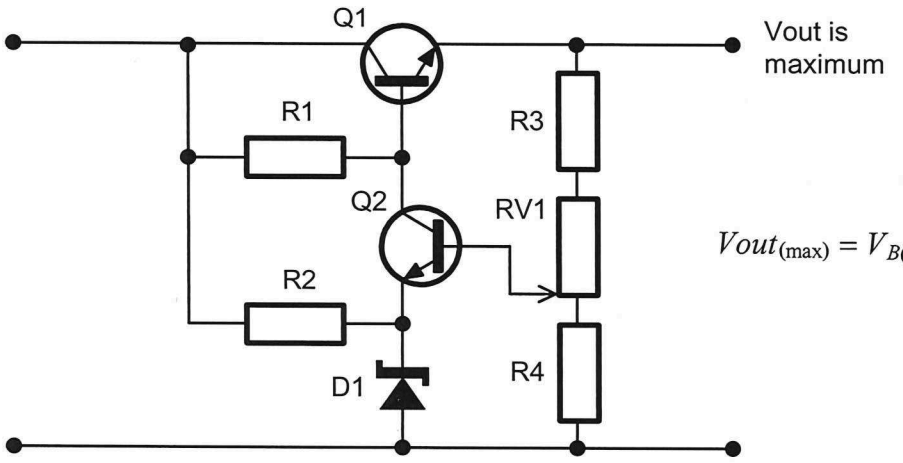

$$Vout_{(\max)} = V_{B(Q2)} \times \left(\frac{R3+RV1}{R4} + 1\right)$$

Figure 8

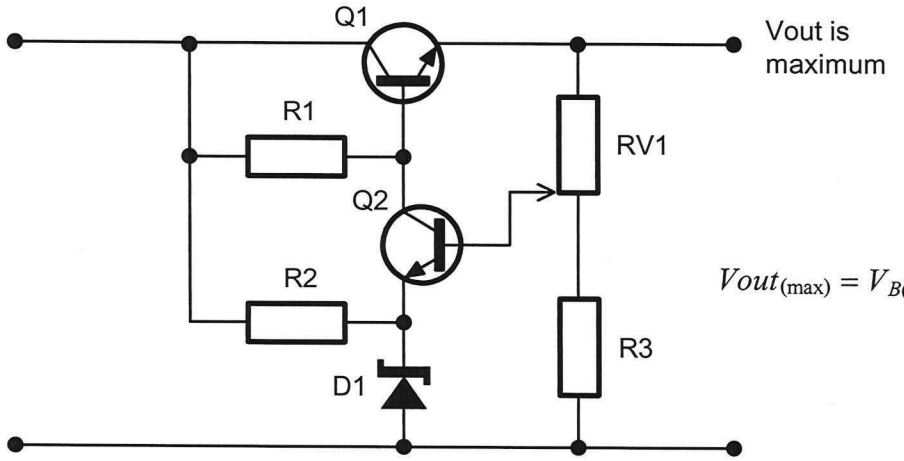

$$Vout_{(\max)} = V_{B(Q2)} \times \left(\frac{RV1}{R3} + 1\right)$$

Figure 9

 Copyright: Not to be reproduced without permission

When the potentiometer of these circuits is at the top of its travel, the output voltage is minimum because the resistance between the output and the base of *Q2* is smallest while the resistance between the base of *Q2* and common is biggest. This is shown in Figures 10 and 11 together with the equations for calculating the minimum output voltage.

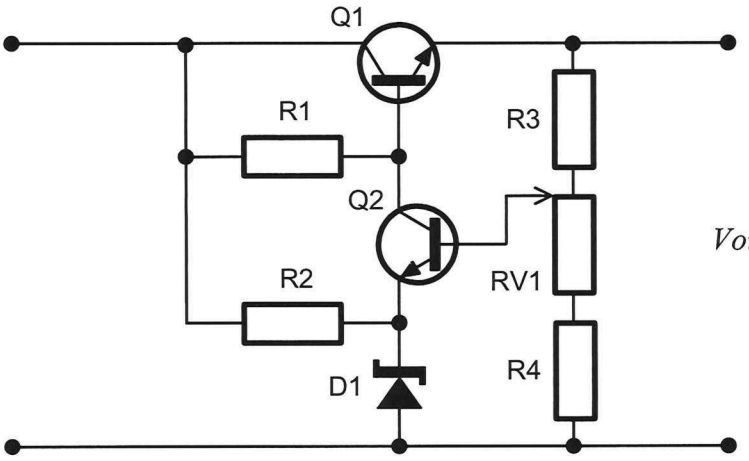

Vout is minimum

$$Vout_{(\min)} = V_{B(Q2)} \times \left(\frac{R3}{RV1+R4} + 1\right)$$

Figure 10

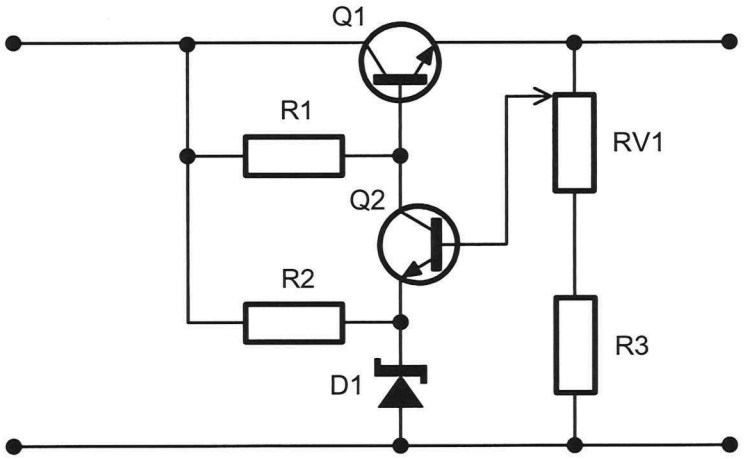

Vout is minimum

$$Vout_{(\min)} = V_{B(Q2)}$$

Figure 11

Minor circuit variations for improved performance

Figure 12 below shows the series regulator with closed loop control in which the reference voltage is supplied via an RC network involving *R2* and *C1*. This prevents the zener diode's potential difference (and hence the output voltage) spiking up when transients occur on mains. This is often known as line transient rejection and a detailed explanation of how it works is provided in Section 1 (see pages 1-14 to 1-16).

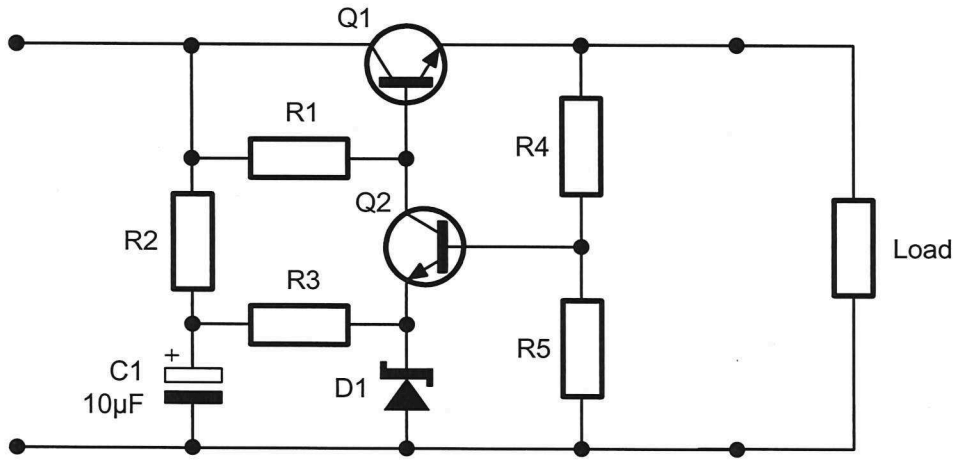

Figure 12 *Series regulator with BJT error amplification and improved line transient response*

Figure 13 below shows the series regulator with BJT error amplification that has a small value capacitor (*C1*) connected between the collector and base of *Q2* (a technique called frequency compensation).

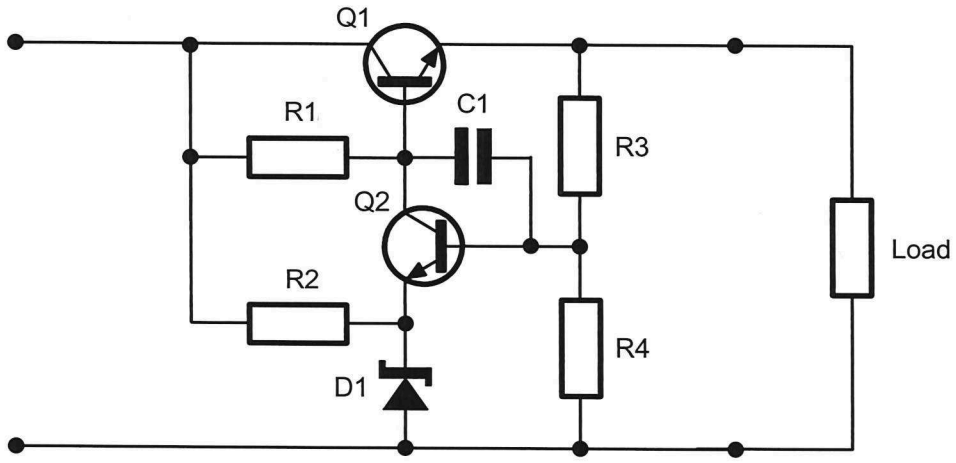

Figure 13 *Series regulator with BJT error amplification and frequency compensation*

The capacitor provides some frequency selective local negative feedback for *Q2*. Its value (typically 100pF or less) ensures that the gain of the BJT stage is only 1 at high frequencies reducing the risk of the circuit becoming a high frequency oscillator as well as a series regulator.

 Copyright: Not to be reproduced without permission

Fault finding

As discussed in an earlier chapter, fault-finding electronic circuits usually involves measuring voltages at key points in the circuit then comparing them with the values that they should be. Where all voltages are correct (within about ±10%), the circuit is probably operating correctly. Where some, or all, voltages are incorrect, the circuit is probably faulty. Moreover, we can usually use the measured voltages in the faulty circuit together with our knowledge of the way components typically fail, and how BJTs work in circuits, to determine which component is faulty and possibly even what's wrong with it.

That said, there's a way of going about the fault-finding process for any type of circuit. For example, signal-tracing can be used to localise the problem to a particular circuit or group of circuits in multi-stage amplifiers. But, signal-tracing can't be used with series regulator circuits because there are no signals to trace: All of the voltages around the circuit are DC. So, how and where do you start? The following is a procedure that many technicians would follow when fault-finding the complete power supply circuit in Figure 14 below.

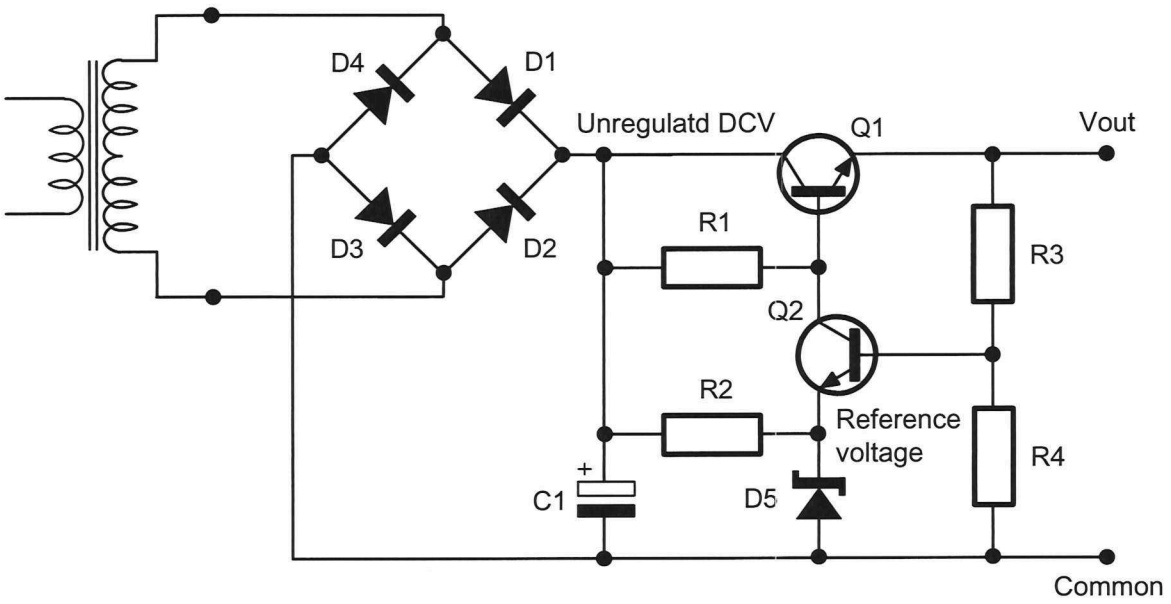

Figure 14

Step 1 - Check the regulator's output voltage

There's no need to fault-find a circuit that isn't faulty! If the output voltage is fairly close to the value that it should be then the circuit is probably working correctly.

That said, even if the output voltage is about right, there may still be a problem. To explain, some series regulator faults give a correct output voltage when the load isn't drawing much current but then *Vout* changes and becomes incorrect when the load attempts to draw more current.

For example, suppose an alarm system is armed but there isn't an intruder in the building. The current that the system draws will be smaller than if an intruder has attempted a break-in and the siren and strobe are activated. Some faults may allow the regulated power supply to provide the smaller current but make the power supply unable to provide the bigger current. This means that when you measure the power supply's output voltage, you should do so under all normal load conditions. In the example of an alarm system, this would involve measuring the power supply's *Vout* when the alarm is armed but not sounding and also when it is sounding to check that it's still the correct voltage.

Step 2 - Check the unregulated DC voltage

This is the voltage at the junction of *D1*, *D2* and *C1* measured with respect to common and is indicated in Figure 15 below.

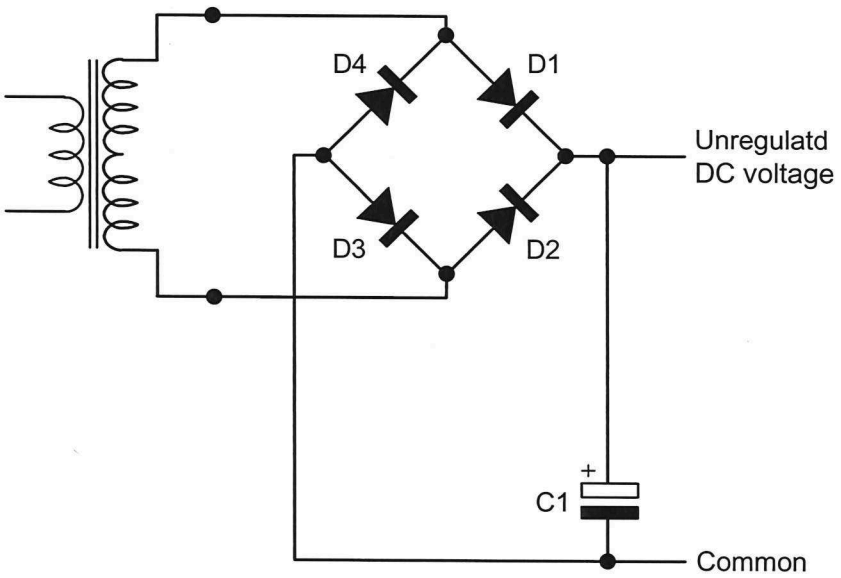

Figure 15

The unregulated DC voltage is the series regulator's input voltage and if it's 0V then it's impossible for the regulator's output voltage to be anything other than 0V too. There would be no point looking for a fault in the series regulator if the problem is being caused by the unregulated power supply portion of the circuit above.

That said, if the unregulated DC voltage is not 0V, but also not the value that it should be, it doesn't necessarily mean that the problem must be with the unregulated power supply. That's because this voltage, being unregulated, will vary for different load currents and for various faults with the regulator.

 Copyright: Not to be reproduced without permission

Step 3 - Measure the reference voltage

Recall that the reference voltage is the voltage at the junction of the zener diode and the emitter of *Q2* (the error amplifier transistor). This is indicated in Figure 16 below.

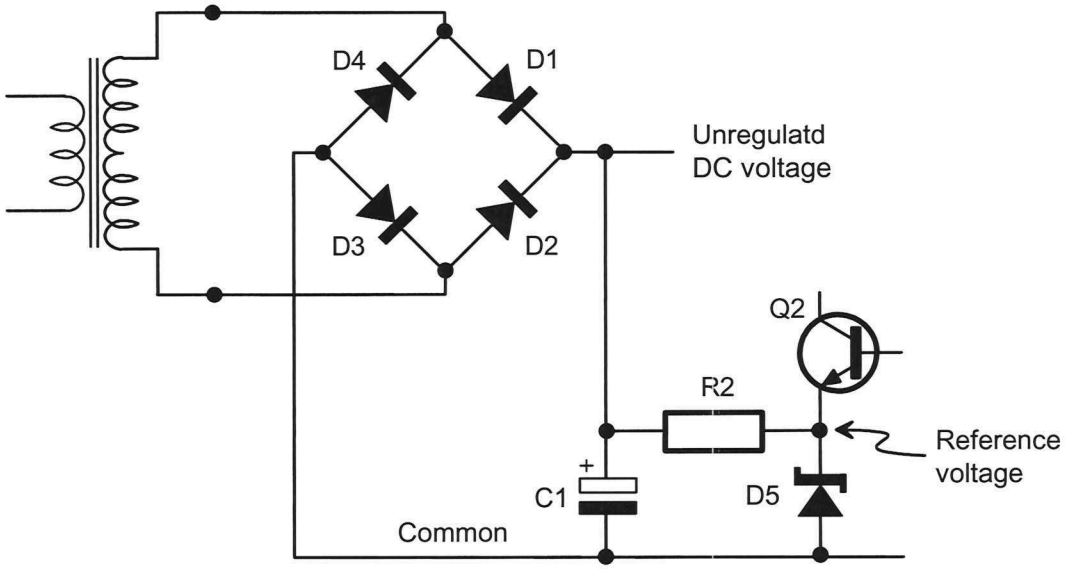

Figure 16

For the series regulator to work and have the correct output voltage, the reference voltage must be the correct value (though, it may be a little different to the diode's rated zennering voltage).

Importantly, as Figure 16 shows, the reference voltage is set up by a zener diode (*D5*) in series with a resistor (*R2*) and is supplied by the unregulated DC voltage. This means that if the unregulated DC voltage is about right, but the reference voltage is not the correct value, the problem must be with either *R2* or *D5*.

(As an aside, it's possible for the reference voltage to be an incorrect value if two or more other components in the series regulator have failed. However, this will never be the case when discussing faults for this circuit in this unit because fault-finding such problems involves considerable experience that you're not expected to demonstrate for this unit.)

Step 4 - Measure the voltages on the other leads of both transistors

These are the remaining voltages that you would measure (with respect to common) and are indicated using the letter "X" in Figure 17 below. The letter "A" shows voltages you would already have measured for Steps 1 to 3 above.

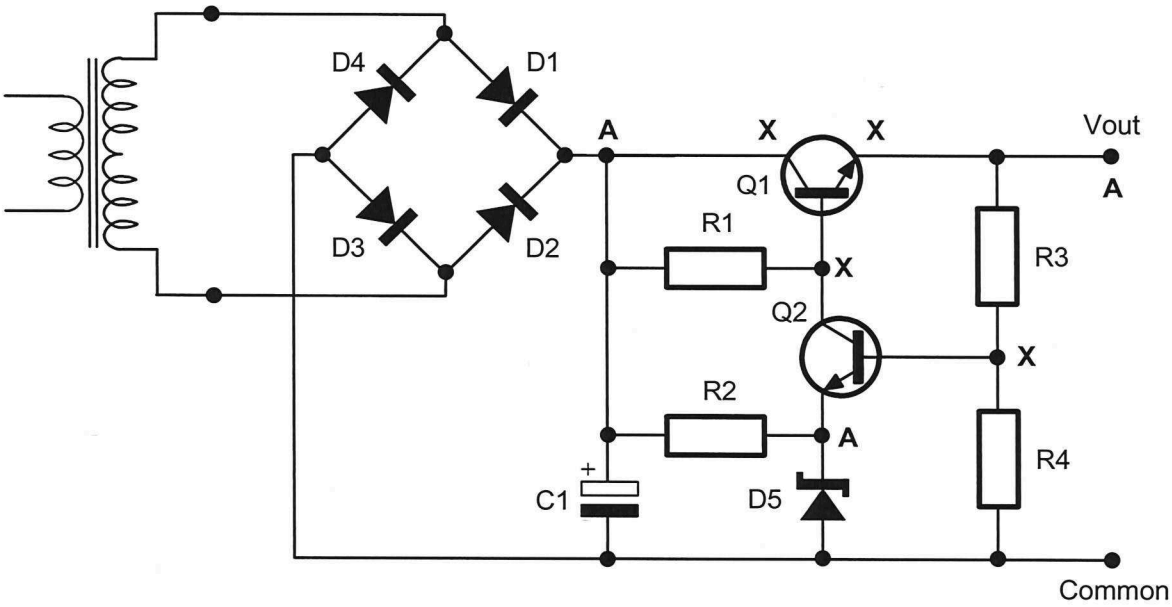

Figure 17

Having made this measurements, you must ask the following questions (usually in this order) to try to determine the fault:

- What's the potential difference between the base and emitter of *Q2*?

  If *Q2*'s base is about 0.6V higher than its emitter (so, for example, if *Q2's* base is 6.2V, and it's emitter is about 5.6V) then you know that this junction is ok. So, the problem is with either *Q2's* collector or with another component and you move on to the next question (see the next bullet point).

  If *Q2's* base and emitter voltages are identical (or only tens of millivolts apart) then you know that this junction is short-circuit and you have found the problem.

  If *Q2*'s base is bigger than its emitter by more than about 0.6V (so, for example, if *Q2's* base is 7V and its emitter is 5.6V) then you know that this junction is open-circuit and you have found the problem.

  If *Q2*'s base is lower than its emitter (and, given you have already established that the reference voltage is the correct value at Step 3), you know that its likely that the junction is ok and you move on to the next question (next bullet point).

 Copyright: Not to be reproduced without permission

- What's the potential difference between the collector and emitter of *Q2*?

  If *Q2's* collector and emitter voltages are identical (or only tens of millivolts apart) then you know that these two leads are short-circuit and you have found the problem. If not, you move on to the next question (next bullet point).

- What's the potential difference between the base and emitter of *Q1*?

  If *Q1*'s base is about 0.6V higher than its emitter (so, for example, if *Q1's* base is 15.9V, and it's emitter is about 15.3V), then you know that this junction is ok. Importantly, this is true even if both voltages are not what they're supposed to be (so, for example, 19V and 19.6V when they should be 15.9V and 15.3V). So, the problem is with either *Q1's* collector or with another component and you move on to the next question (next bullet point).

  If *Q1's* base and emitter voltages are identical (or only tens of millivolts apart) then you know that this junction is short-circuit and you have found the problem.

  If *Q1*'s base is more than 0.6V and the regulator's output voltage is 0V then you know that this junction is open-circuit and you have found the problem.

  If *Q1*'s base is lower than its emitter then move on to the next question (next bullet point).

- What's the potential difference between the collector and emitter of *Q1*?

  If *Q1's* collector and emitter voltages are identical (or only tens of millivolts apart) then you know that these two leads are short-circuit and you have found the problem. If not, you move on to the next question (next bullet point).

- Even if all the voltages around the transistors are not what they should be, are correct relative to each other (ie the emitter voltage is the lowest, the base voltage is 0.6V bigger than the emitter and the collector voltage is bigger again by more than a couple of hundred millivolts)?

  If so, you now use your understanding of how the circuit works to think about which of the remaining likely faults below would produce the measured values that you obtained.

  - *Q1* collector open-circuit
  - *Q2* collector open-circuit
  - *R3* high in value
  - *R3* open-circuit
  - *R4* high-in value
  - *R4* open-circuit

This is where your knowledge of how the circuit works now comes into play. You think about the your measurements and think about which fault (or faults) might cause the values that you obtained.

This takes practise but it's not as difficult as it sounds. The remaining notes in this chapter are for you to read for yourself explain the effects on circuit voltages for all the likely faults.

The effects of likely faults

The following pages discuss the effects of the likely faults with the series regulator circuit introduced in this chapter. While the teacher may use these notes to assist in the teaching of the fault-finding process described from page 3-18, they're intended for you to read to deepen your understanding of how the circuit works and why the faults have the effects that they do on the circuit voltages.

To help you understand the fault's effects, they're based on the circuit in Figure 2 on Page 3-6. This circuit is shown again below for your convenience with key voltages around the circuit shown in bold (all with respect to common).

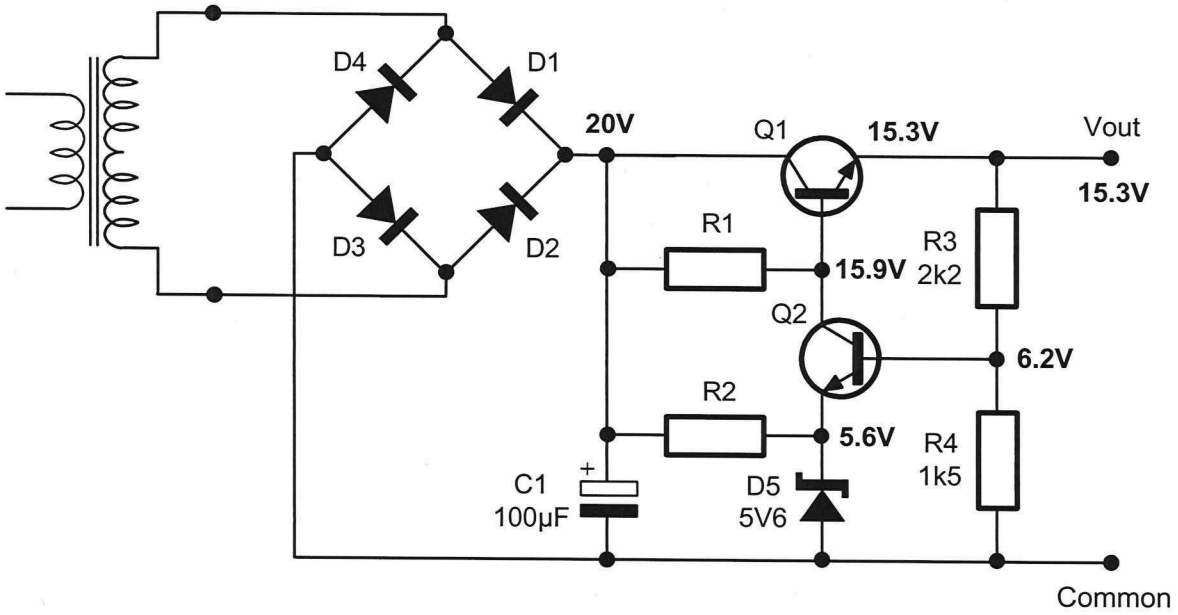

Figure 18

 Copyright: Not to be reproduced without permission

First, a few simplifications are made to help prevent the explanations from getting too long.

- The first simplification is that the unregulated DC voltage (20V in this example) doesn't change. In actual circuits, faults are likely to load the unregulated portion of the power supply by different amounts. So, this would cause the unregulated voltage to go down by different amounts depending on the regulator fault and how much of a load it presents to the unregulated circuit.

- The second simplification is that the regulator is unloaded (or only lightly loaded) for the initial description of the fault's symptoms. Further explanation is given for heavier loads where this would change the voltages that you would expect to see.

- The third simplification is that the zener diode's voltage is exactly 5.6V and never changes. In reality, the diode's zenering voltage is unlikely to be exactly the rated value in the first instance because its a function of the current flowing through it. Moreover, different faults would cause different amounts of current to flow through the zener causing its zenering voltage to be a little different for each fault.

Most importantly, it's **not** recommended that you try to memorise these fault conditions, there are just too many. Instead, go through the procedure for each fault and work out at which step you would identify the fault. For a few of them, you would have to go all the way to Step 4. In which case, think about what clues there are in the voltage measurements that would tell you what the fault probably is. The explanations for the faults will help in this.

- *Q1* short-circuit collector-emitter

The voltages in Figure 19 show what happens around the circuit when *Q1* goes short-circuit between its collector and emitter leads. As you can see, the regulator's input and output voltages are the same as each other (though there may be very small differences between them). Therefore, it becomes impossible for *Q1's* base to be 0.6V higher than its emitter and so *Q1's* base-emitter p-n junction turns off. Under these conditions, *Q2* will be turned on hard (possibly into saturation) and so the voltage on its collector will likely be much lower than normal (8V is shown here as an example).

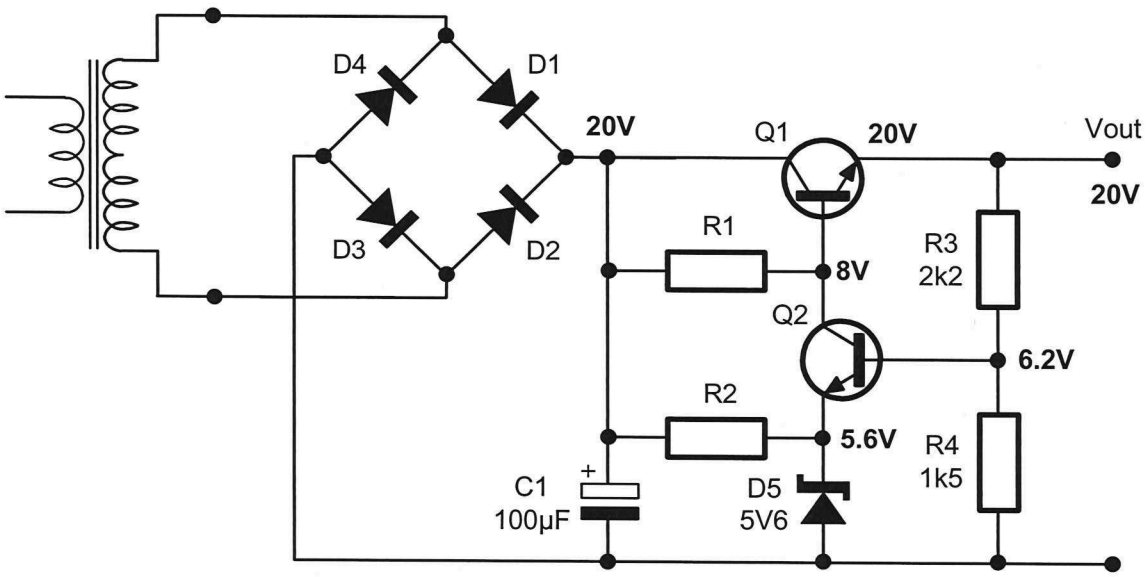

Figure 19

For a heavily loaded circuit (ie one with a smaller load resistance and so the load would be drawing more current), both the unregulated power supply's voltage (V_{C1}) and the output voltage (*Vout*) would be lower or much lower than 20V (because the load is directly connected across the unregulated power supply's output voltage and, being unregulated, it would drop for heavy loads).

Key symptoms of this fault include:

- *Vout* increases to the unregulated power supply's output voltage
- *Q1's* collector-emitter voltage is about 0V
- *Q1's* base voltage is lower than its emitter voltage
- *Q2's* base-emitter voltage is still about 0.6V so it's forward biased (and so it has a collector current) which, in turn, causes *Q1's* base voltage to be lower than its emitter voltage.

 Copyright: Not to be reproduced without permission

- *Q1* short-circuit base-emitter

The voltages in Figure 20 show what happens around the circuit when *Q1* goes short-circuit between its base and emitter leads. *Q1* turns off (because the base-emitter p-n junction doesn't exist any longer) but, as you can see, the output voltage remains a voltage close to the no-fault output voltage. However, the output voltage is no-longer regulated which matters when the circuit is more heavily loaded (see below).

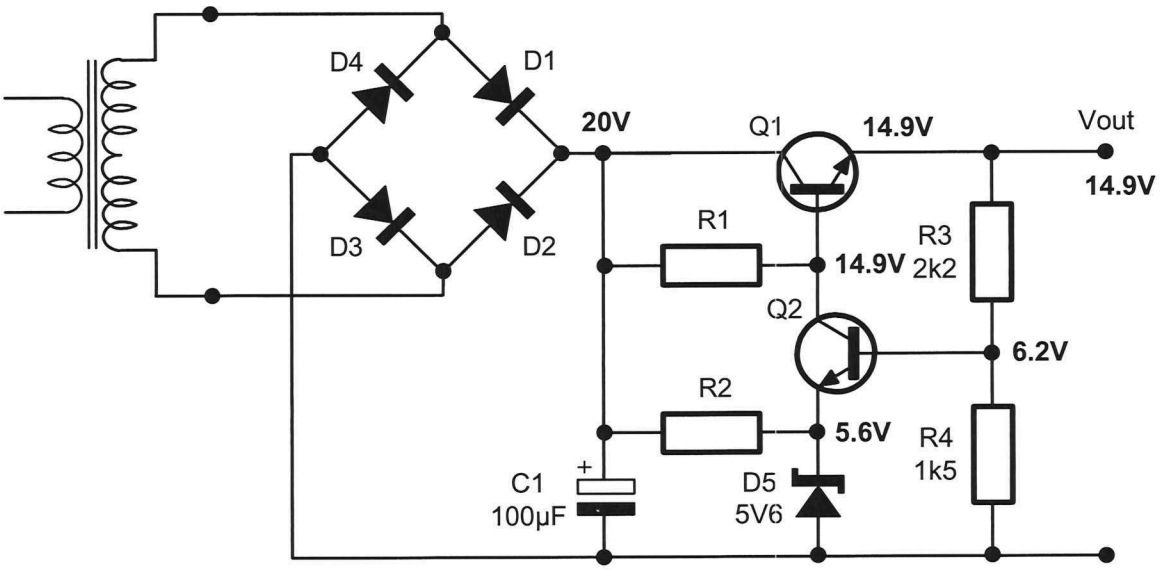

Figure 20

For a heavily loaded circuit (ie one with a smaller load resistance and so the load would be drawing more current), the output voltage (*Vout*) would be lower or much lower than the output voltage of the working circuit.

Key symptoms of this fault include:

- *Vout* decreases a little for no-load and light loads and decreases a lot for heavy loads
- *Q1's* base-emitter voltage is 0V
- *Q2's* base-emitter voltage is still about 0.6V.

- *Q1* open-circuit collector

The voltages in Figure 21 show what happens around the circuit when the collector of *Q1* goes open-circuit. There is no-longer any current to the load via *Q1's* collector. The only load current is the current that flows via *R1* and *Q1's* base-emitter junction which develops a potential difference across the load shown here as remaining close to the no-fault output voltage. However, the output voltage is no-longer regulated which matters when the circuit is more heavily loaded (see below).

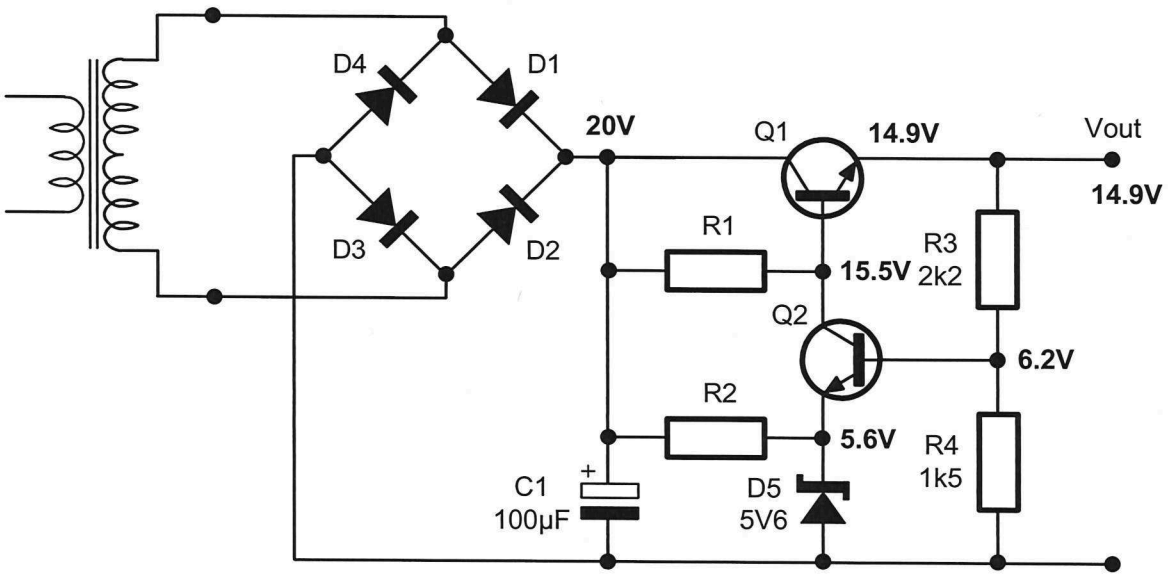

Figure 21

For a heavily loaded circuit (ie one with a smaller load resistance and so the load would be drawing more current), the output voltage (*Vout*) would be lower or much lower than the working circuit.

Key symptoms of this fault include:

- *Vout* decreases a little for no-load and light loads and decreases a lot for heavy loads
- *Q1's* base-emitter voltage is still about 0.6V (though it could be a little over 0.7V)
- *Q2's* base-emitter voltage is still about 0.6V (though this may not still be the case for heavy loads).

 Copyright: Not to be reproduced without permission

- *Q1* open-circuit base (or open-circuit emitter, it's effectively the same thing)

  The voltages in Figure 22 show what happens around the circuit when either the base or the emitter of *Q1* goes open-circuit. The output voltage is 0V because *Q1* is turned off and so there would be no path from the regulator's input to its output.

  Naturally, the voltage on the base of *Q2* is 0V too (because *R3* and *R4* are a voltage divider) and so *Q2* is also turned off. In turn, this causes the collector of *Q2* to go up to *Q2's Vcc* (which is the unregulated power supply's output voltage and 20V in this case).

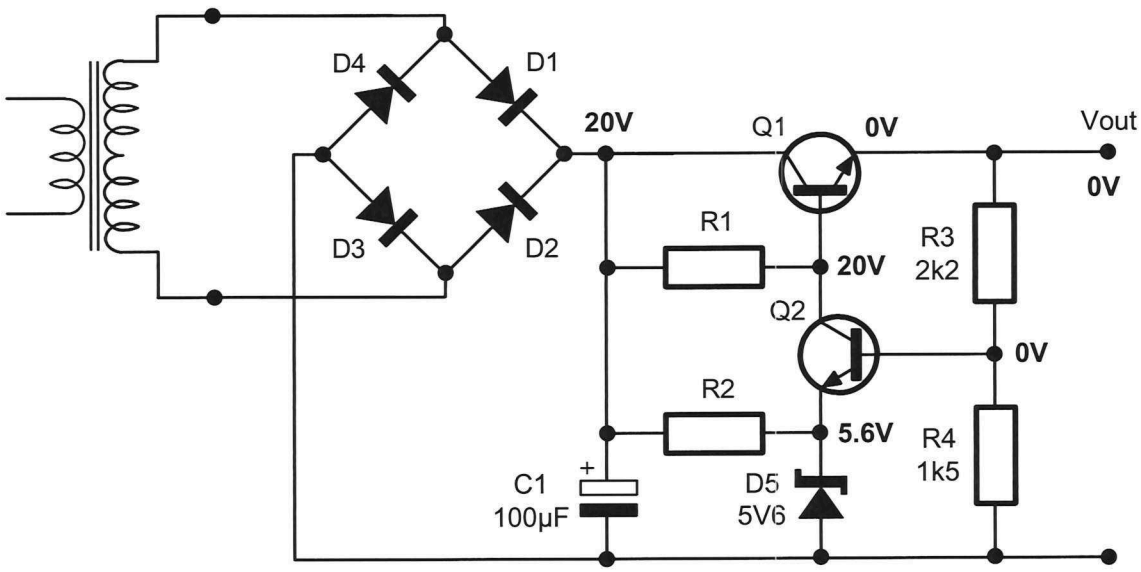

Figure 22

Key symptoms of this fault include:

- *Vout* decreases to 0V
- *Q1's* base-emitter voltage is much bigger than 0.6V
- *Q2's* base voltage is lower than its emitter voltage so it turns off causing *Q1's* base voltage to rise to the unregulated power supply's output voltage.

- Zener diode short-circuit

The voltages in Figure 23 show what happens around the circuit when the zener diode goes short-circuit. The output voltage drops to about 1.7V for this circuit. (The output voltage in other circuits and would depend on the values of *R3* and *R4*. That said, it would still be much lower than the regulator's correct output voltage.)

To understand why the voltages shown occur, you first need to appreciate that, with the zener diode being short-circuit, the potential difference across it would be 0V. In turn, this means that the voltage on the emitter of *Q2* is also 0V. So, the base voltage of *Q2* is about 0.7V (and not 0.6V) because base-emitter junction would be turned on hard with this fault.

Interestingly, if you perform the circuit analysis on page 3-6 and 3-7 using 0.7V for *Q2's* base voltage, you'd get around 1.7V for the output voltage and, logically, all the other voltages shown around the circuit below. So, although the zener diode has failed, the rest of the circuit keeps working as though it has become a 0V zener diode.

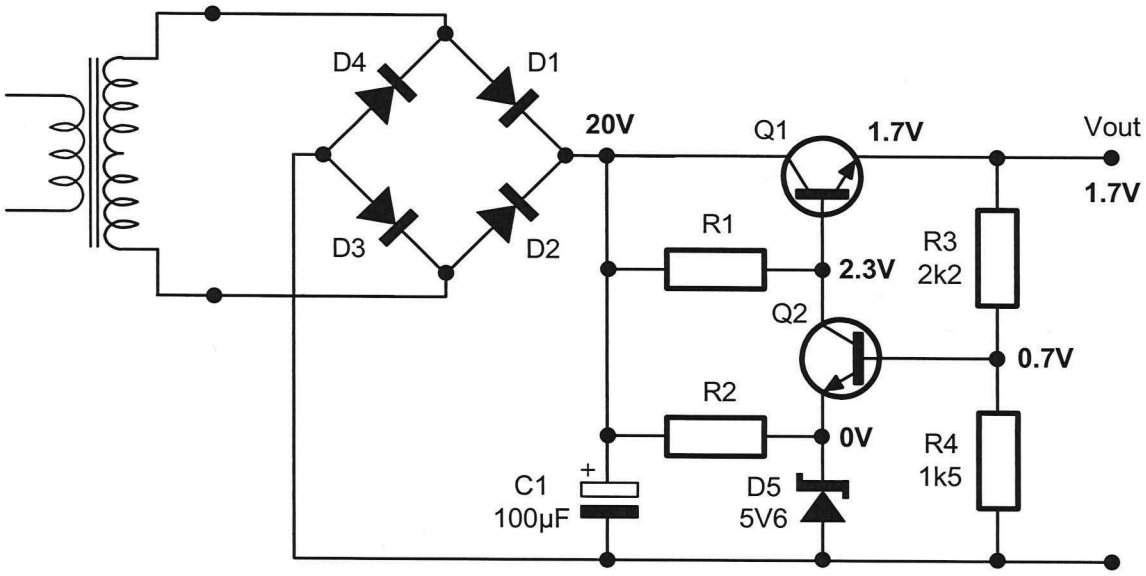

Figure 23

Key symptoms of this fault include:

- *Vout* decreases to a small value but not 0V
- *Q1's* base-emitter voltage is still about 0.6V
- *Q2's* base-emitter voltage is still about 0.6V (though it could be a little over 0.7V).

 Copyright: Not to be reproduced without permission

- Zener diode open-circuit

The voltages in Figure 24 show what happens around the circuit when the zener diode goes open-circuit. The output voltage rises to maximum which is typically about one to two volts lower than the regulator's input voltage (so 19V is shown for this circuit).

To understand why the voltages shown are obtained, you first need to appreciate that, with the zener diode open-circuit, the potential difference across it rises to the unregulated power supply's output voltage - Remember, open-circuits are electrically very, very high resistances and so they take all of the supply voltage across them and leaving the other series components (*R2* in this case) are left with 0V across them.

Now, as the emitter voltage of *Q2* is 20V, it would be impossible for *Q2* to be turned on because the base voltage required to turn it on (ie 20.6V) is larger than the unregulated power supply's voltage (ie larger than 20V in this case).

So, with *Q2* off, the circuit involving *Q1* effectively becomes a base-biased BJT circuit with a base resistor (*R1*) sufficiently low to make *Q1's* base current sufficiently large that *Q1* is driven into saturation. When power transistors are driven into saturation, they have about one or two volts across the collector-emitter. Taking the lower of those two gives a 19V output.

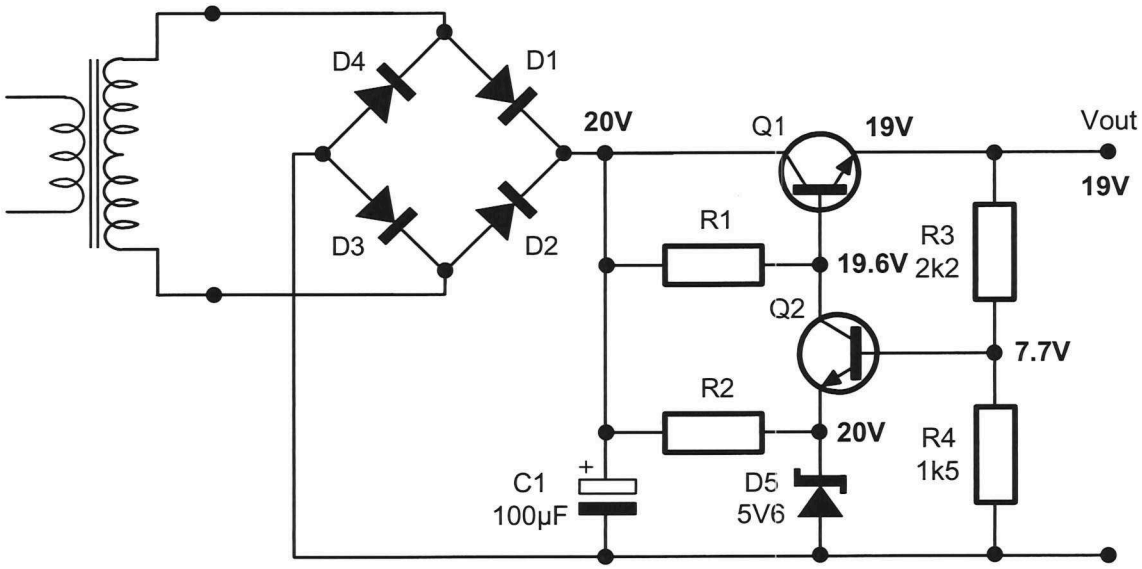

Figure 24

Key symptoms of this fault include:

- *Vout* increases to a volt or two below the unregulated power supply's output voltage
- *Q1's* base-emitter voltage is still about 0.6V
- *Q2's* base voltage is lower than its emitter voltage.

- *Q2* short-circuit base-emitter

The voltages in Figure 25 show what happens around the circuit when *Q2* goes short-circuit between its base and emitter leads. *Q2* turns off (because the base-emitter p-n junction doesn't exist any longer) and so the circuit involving *Q1* effectively becomes a base-biased BJT circuit with a base resistor (*R1*) sufficiently low to make *Q1's* base current sufficiently large that *Q2* is driven into saturation. When power transistors are driven into saturation, they have about one or two volts across the collector-emitter. Taking the lower of those two gives a 19V output.

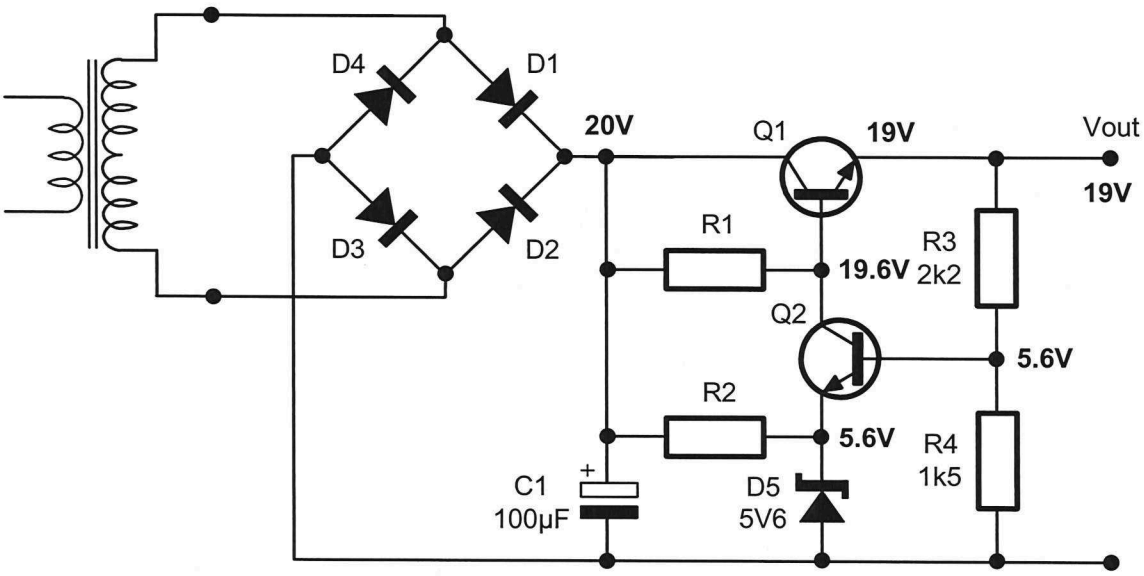

Figure 25

For a heavily loaded circuit (ie one with a smaller load resistance and so the load would be drawing more current), the output voltage (*Vout*) would be lower or much lower.

Key symptoms of this fault include:

- *Vout* increases to a volt or two below the unregulated power supply's output voltage but would be smaller for heavy loads
- *Q1's* base-emitter voltage is still about 0.6V
- *Q2's* base-emitter voltage is 0V.

 Copyright: Not to be reproduced without permission

- *Q2* open-circuit base (or open-circuit emitter, it's effectively the same thing)

  The voltages in Figure 26 show what happens around the circuit when either the base or the emitter of *Q2* goes open-circuit. *Q2* turns off and so the circuit involving *Q1* effectively becomes a base-biased BJT circuit with a base resistor (*R1*) sufficiently low to make *Q1's* base current sufficiently large that *Q1* is driven into saturation. When power transistors are driven into saturation, they have about one or two volts across the collector-emitter. Taking the lower of those two gives a 19V output.

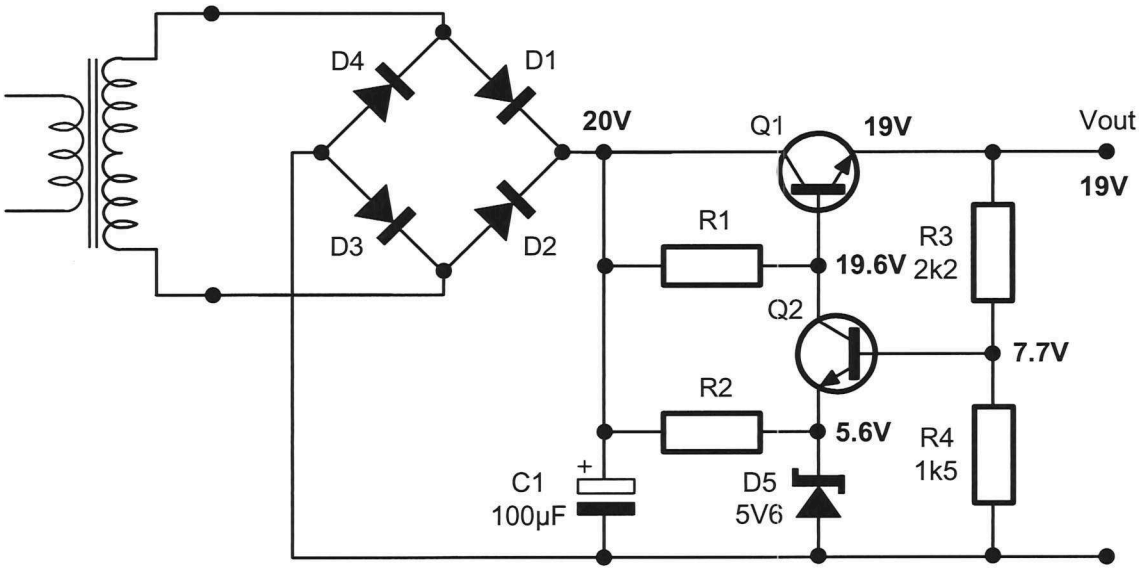

Figure 26

Key symptoms of this fault include:

- *Vout* increases to a volt or two below the unregulated power supply's output voltage
- *Q1's* base-emitter voltage is still about 0.6V
- *Q2's* base-emitter voltage is bigger than 0.6V.

- *Q2* short-circuit collector-emitter

The voltages in Figure 27 show what happens around the circuit when *Q2* goes short-circuit between its base and emitter leads. The circuit effectively becomes the series regulator circuit introduced in the first chapter with the zener diode's zenering voltage on the base of the pass transistor (*Q1*). The smaller voltage on the circuit's output cannot support a voltage on the *Q2's* base as required (6.2V in this example) to forward bias its base-emitter junction.

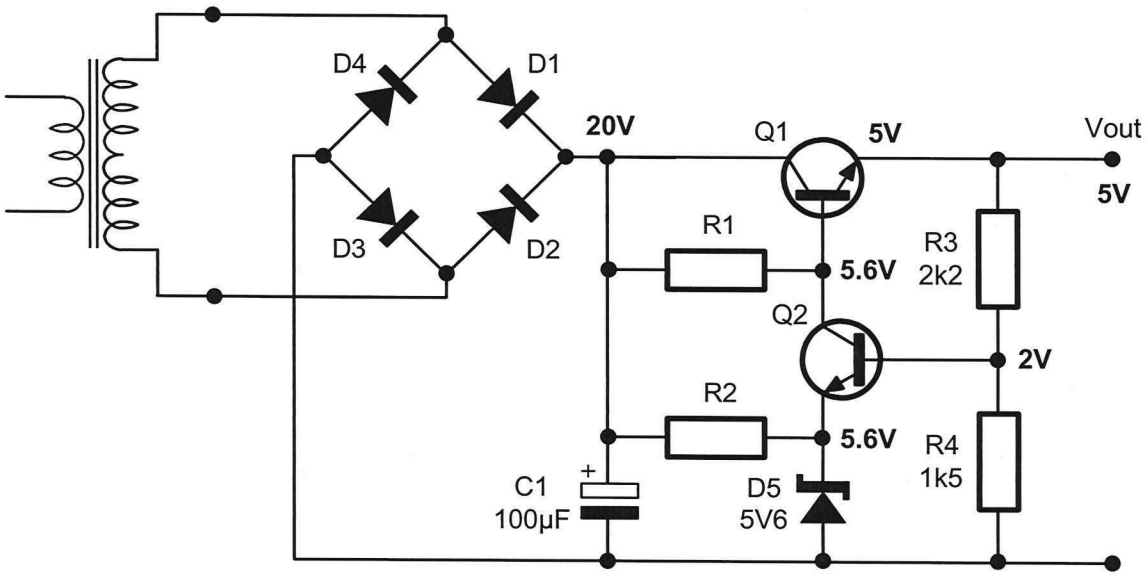

Figure 27

Key symptoms of this fault include:

- *Vout* decreases to a voltage that is 0.6V lower than the zener diode's zenering voltage
- *Q1's* base-emitter voltage is still about 0.6V
- *Q2's* base voltage is lower than its emitter voltage.

 Copyright: Not to be reproduced without permission

- *Q2* open-circuit collector

The voltages in Figure 28 show what happens around the circuit when the collector of *Q2* goes open-circuit. As there is no path via *Q2's* collector, it's as though it is turned off. So the circuit involving *Q1* effectively becomes a base-biased BJT circuit with a base resistor (*R1*) sufficiently low to make *Q1's* base current sufficiently large that *Q1* is driven into saturation. When power transistors are driven into saturation, they have about one or two volts across the collector-emitter. Taking the lower of those two gives a 19V output.

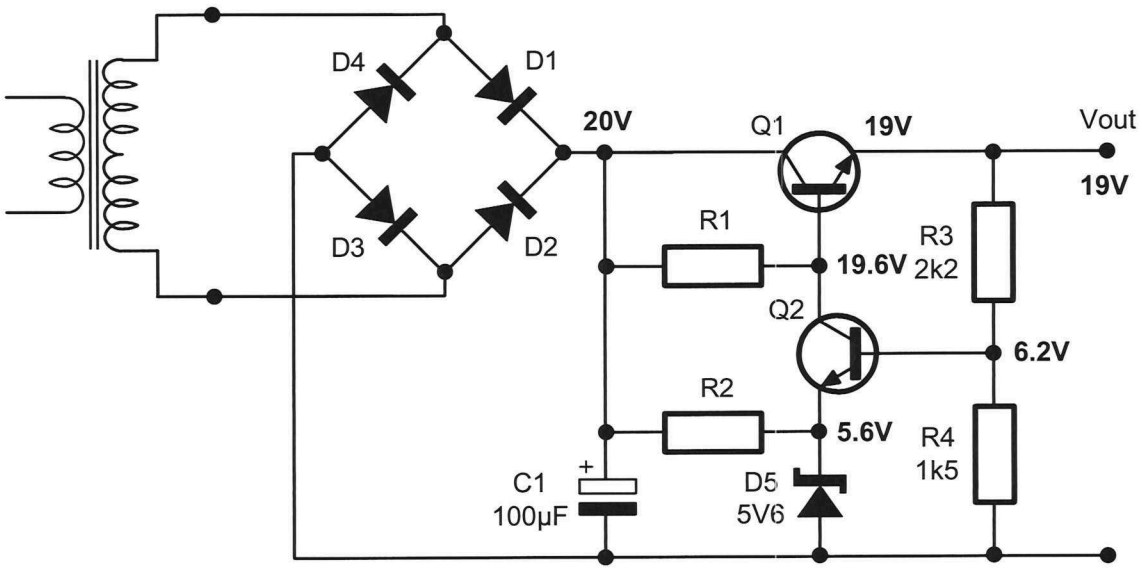

Figure 28

Key symptoms of this fault include:

- *Vout* increases to a volt or two below the unregulated power supply's output voltage
- *Q1's* base-emitter voltage is still about 0.6V
- *Q2's* base-emitter voltage is still about 0.6V.

- *R3* a little high (say, up by about 30% or so in this example)

The voltages in Figure 29 show what happens around the circuit when *R3* goes a little high (say, by 30%). This fault can easily be understood by simply recalculating the potential differences around the circuit using 2k9 for *R3* instead of 2k2.

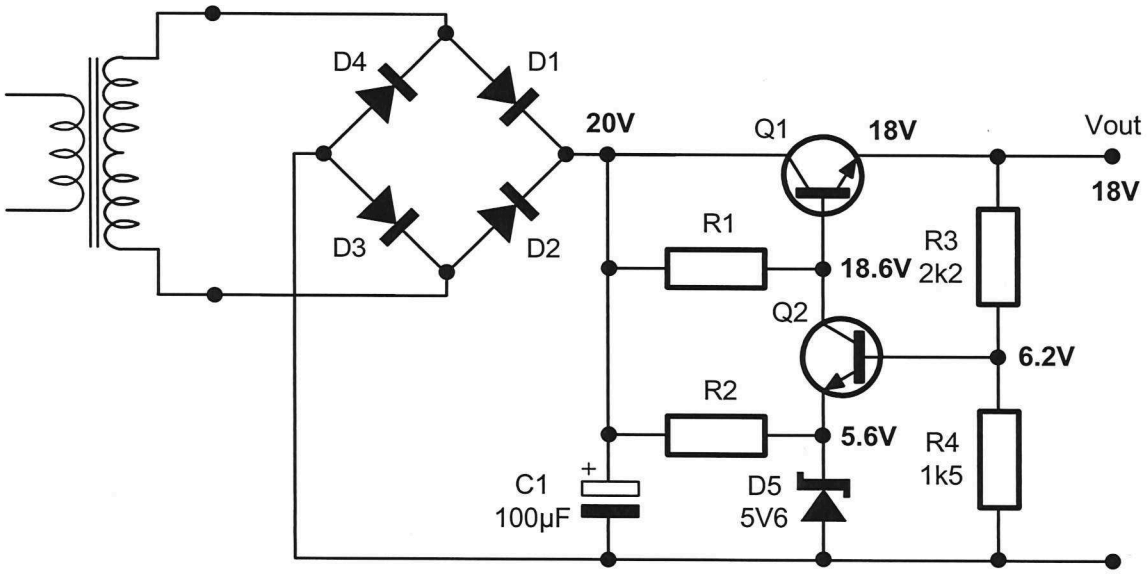

Figure 29

Key symptoms of this fault include:

- *Vout* increases but is still regulated
- *Q1's* base-emitter voltage is still about 0.6V
- *Q2's* base-emitter voltage is still about 0.6V.

 Copyright: Not to be reproduced without permission

- *R3* high (say, by about 70% or more in this example)

  The voltages in Figure 30 show what happens around the circuit when *R3* goes very high (so, more than about 70%). The voltage on *Q2's* base must drop below the amount need to forward bias it, turning it off. So the circuit involving *Q1* effectively becomes a base-biased BJT circuit with a base resistor (*R1*) sufficiently low to make *Q1's* base current sufficiently large that *Q1* is driven into saturation. When power transistors are driven into saturation, they have about one or two volts across the collector-emitter. Taking the lower of those two gives a 19V output.

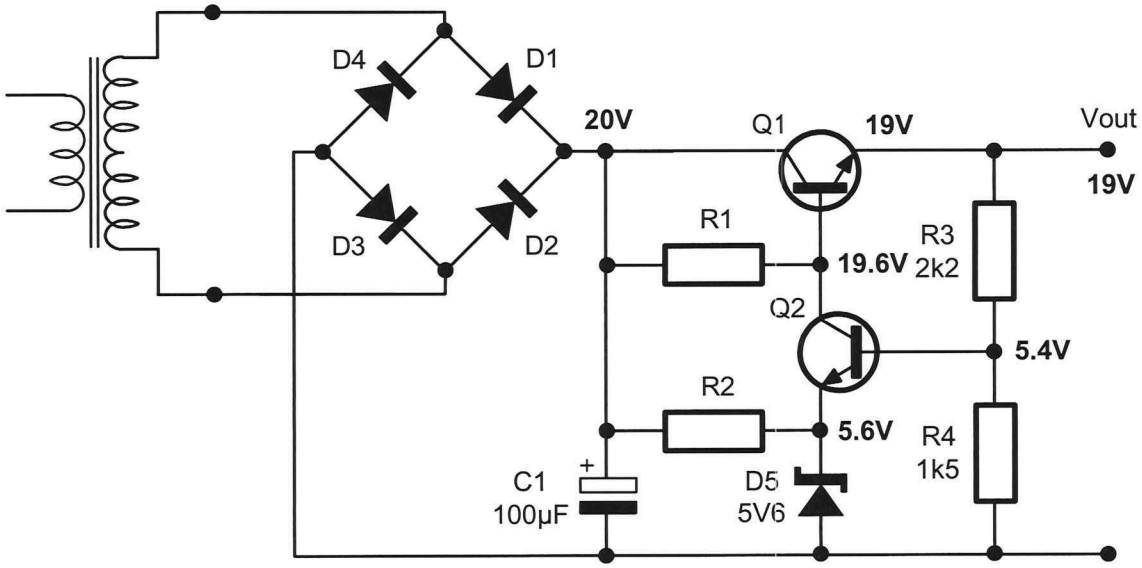

Figure 30

Key symptoms of this fault include:

- *Vout* increases to a volt or two below the unregulated power supply's output voltage
- *Q1's* base-emitter voltage is still about 0.6V
- *Q2's* base voltage is lower than needed to be forward biased.

- *R3* open-circuit

The voltages in Figure 31 show what happens around the circuit when *R3* goes open-circuit. This fault is almost identical to the previous fault except that the voltage on *Q2's* base drops to 0V.

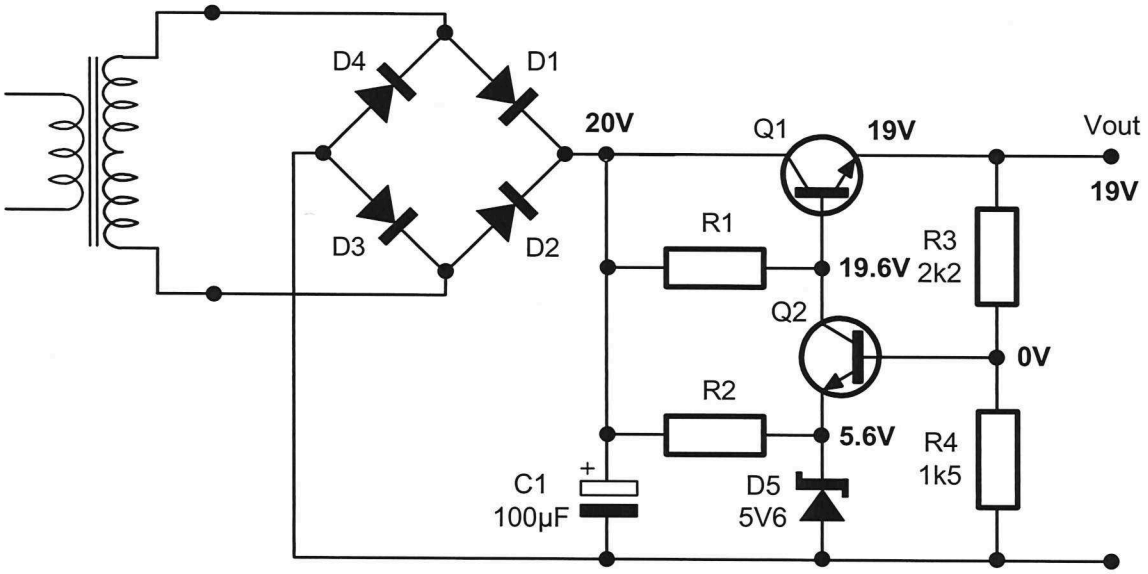

Figure 31

Key symptoms of this fault include:

- *Vout* increases to a volt or two below the unregulated power supply's output voltage
- *Q1's* base-emitter voltage is still about 0.6V
- *Q2's* base voltage is 0V.

 Copyright: Not to be reproduced without permission

- *R4* high (say, it doubles)

The voltages in Figure 32 show what happens around the circuit when *R4* goes a little high (say, it doubles). This fault can easily be understood by simply recalculating the potential differences around the circuit using 3kΩ for *R4* instead of 1k5.

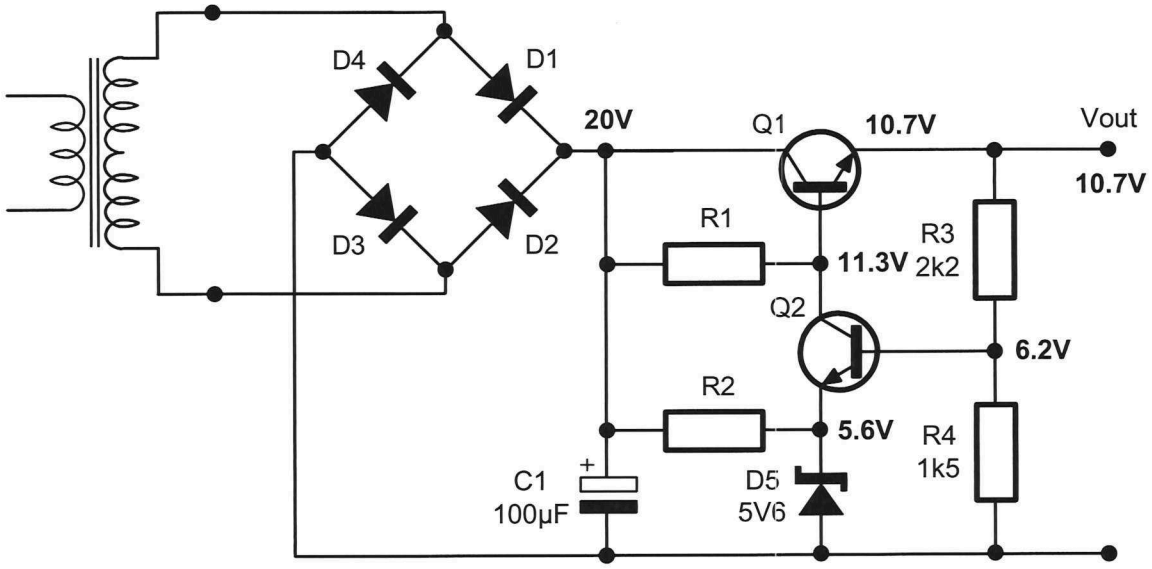

Figure 32

Key symptoms of this fault include:

- *Vout* decreases but is still regulated
- *Q1's* base-emitter voltage is still about 0.6V
- *Q2's* base-emitter voltage is still about 0.6V.

- *R4* open-circuit

The voltages in Figure 33 show what happens around the circuit when *R4* goes open-circuit. This fault is almost identical to the previous fault except that the output voltage decreases to the voltage on *Q2's* base (6.2V in this example).

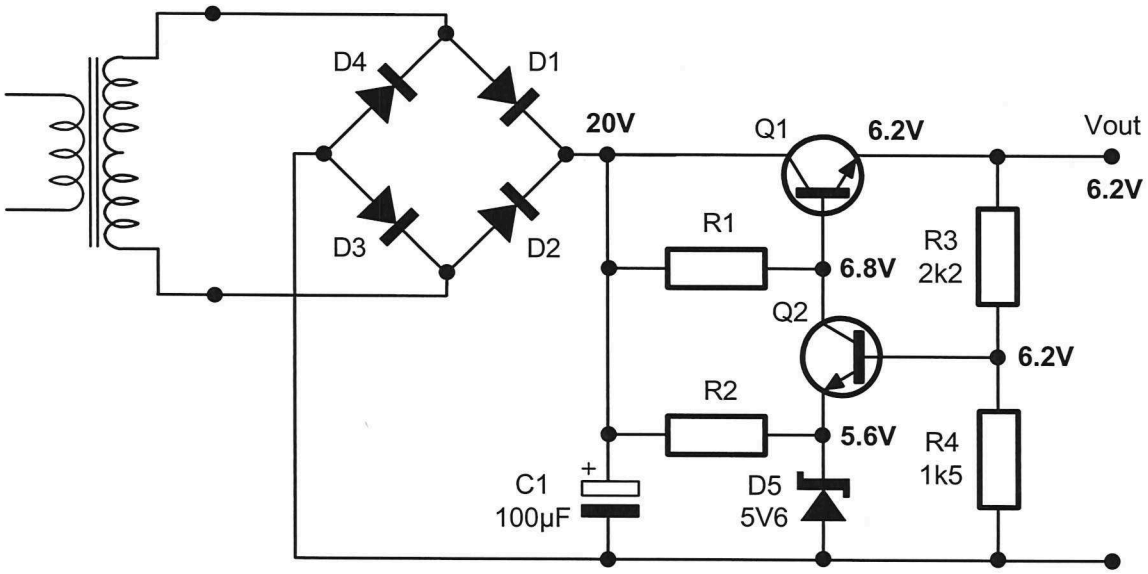

Figure 33

Key symptoms of this fault include:

- *Vout* decreases to the *Q2* base voltage
- *Q1's* base-emitter voltage is still about 0.6V
- *Q2's* base-emitter voltage is still about 0.6V.

Copyright: Not to be reproduced without permission

Student notes

Skill practice 3

Practise fault-finding a series regulator circuit with closed-loop control (BJT error amplification)

This exercise is practise for the sorts of skills you may be required to perform in a practical test. Remember, in any practical tests you will be working alone so make sure that you can perform all the steps. It should take you about 1 hour to complete this exercise.

Equipment

- Series regulator fault-finding panel
- IEC lead
- DMM

Remember:

Follow TAFE NSW WHS guidance at all times!

 Copyright: Not to be reproduced without permission

Work tasks

1 Read your WHS responsibilities at the top of the form below. Then conduct a WHS risk assessment and record your findings in the space provided.

Responsibilities of students under the Model WHS Act: s28

- Take reasonable care for your own health and safety by working safely at all times
- Take reasonable care to ensure that your acts or omissions don't put the health and safety of others at risk
- Follow all TAFE NSW WHS guidance and comply with all reasonable instructions from TAFE NSW staff to assist them in complying with the TAFE NSW WHS requirements
- In addition to the above, you must:
  - use and maintain machinery, tools and all other equipment properly and safely
  - ensure that your work area is free of hazards
  - notify a TAFE NSW staff member of actual or potential hazards
  - wear/use prescribed safety equipment
  - take notice of any safety signs and adhere to their instructions

Risks involved in this activity include:	**Control measures:**
■ Trip hazards (eg students bags) ■ Objects dropped on feet (while equipment is taken to and from workbenches).	■ Move bags and other objects from walkways ■ Plan lifting of equipment
Others: _____	Other: _____
_____	_____
_____	_____

My signature here indicates that I have read and understand my responsibilities under the Model WHS Act s28 (detailed above). I have also conducted a risk assessment before undertaking this activity and have identified measures to control these risks and have implemented them.

Signature: _____ Date: _____

2 Gather the equipment needed for this exercise.

3 Use the IEC lead to connect the Series Regulator Fault-finding Panel to a GPO (a power point).

4 Turn on the panel.

5 Set all the fault switches to their normal (off) position.

6 Use a DMM to set the regulator's output to 9V by adjusting *RV1*.

7 Read all of the following notes carefully including the notes on the next page. If there is anything about the circuit that you're still unsure of, ask the teacher for clarification before continuing with this fault-finding exercise.

Note 1: The purpose of *R3* and *Q3* is explained in another chapter. But, for now, as there is no load connected, there will be only a small current through *R3* (it's the current that flows to ground via the series circuit that includes *RV1* and is about 3mA). This fact, together with the fact that *R3* is a small value, means that the potential difference across *R3* is very small (it'll be about 3mV). Importantly, this means that the voltage on the pass transistor's emitter will be almost identical to the regulator's output voltage. In the following exercise, you'll measure these two voltages and you should always find this to be the case.

Note 2: Following on from Note 1, with effectively 0V across *R3* there is 0V across the base-emitter junction of *Q3* and so it will always be turned off during this exercise making it is invisible to the circuit.

Note 3: The diode *D5* is a protection diode that is not needed for the normal operation of this circuit. However, it's used on this panel to prevent damage to *Q2* should two of the faults be activated at the same time. As this diode plays no part in the circuit's operation, it can be ignored and, as you can't measure the voltage on the collector of *Q2*, it can be taken to be the same as the voltage on the base of *Q1*.

Note 4: Taking the above notes together, the circuit on the panel effectively looks like the circuit in Figure 1 on the next page. Please keep this in mind as you work through the faults because it means that none of the simulated faulty components are *R3*, *Q3* and *D5*.

 Copyright: Not to be reproduced without permission

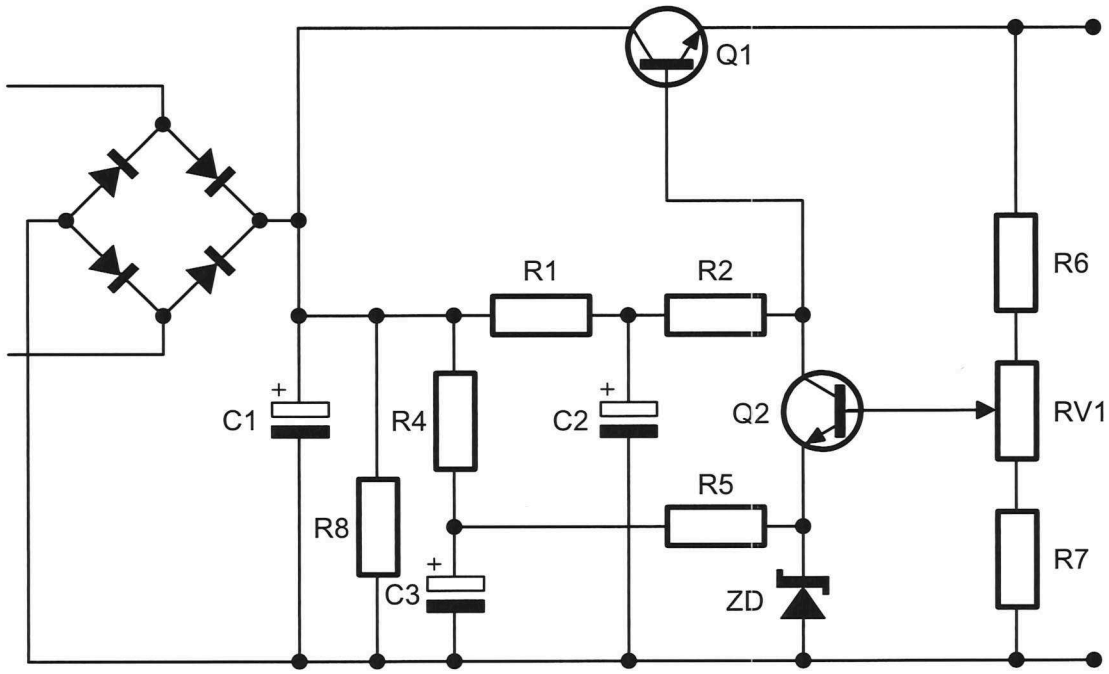

Figure 1

Note 5: The combination of *R4* and *C3* provides transient rejection at the emitter of *Q2* as explained in Section 1 of the workbook (see pages 1-14 to 1-16). If you're not sure what this means, read over the notes on those pages before continuing.

Note 6: Despite the transient rejection at the emitter of *Q2*, it's still possible for transients on mains to also cause sudden short-lasting changes on the regulator's output via the base-emitter of *Q1*. So, the combination of *R1* and *C2* provide transient rejection at this point in the circuit in exactly the same way as *R4* and *C3* do for *Q2*'s emitter.

8 Measure the voltage at the seven points shown in Figure 2 below (all measurements are to be with respect to common). Record your measurements in the spaces provided.

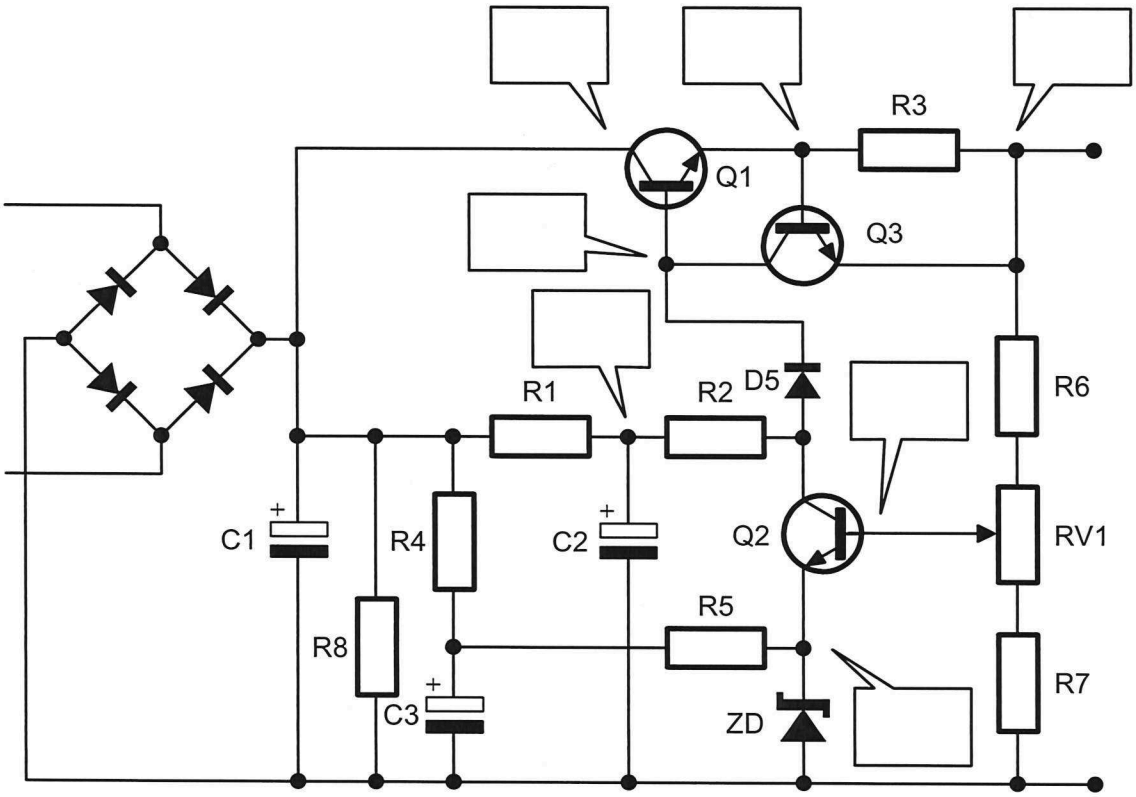

Figure 2

9 Read the following note carefully.

Note: These measurements will serve as a reference set of circuit voltages that you will use to compare the same measurements for faulty circuits to. Which voltages have stayed the same, which ones have changed, and how much they have changed, can be used to determine which component is faulty and what's wrong with it.

 Copyright: Not to be reproduced without permission

10 Switch on fault number 1.

11 Measure the voltage at the same seven points in the circuit. Record your measurements in the space provided in Figure 3 below.

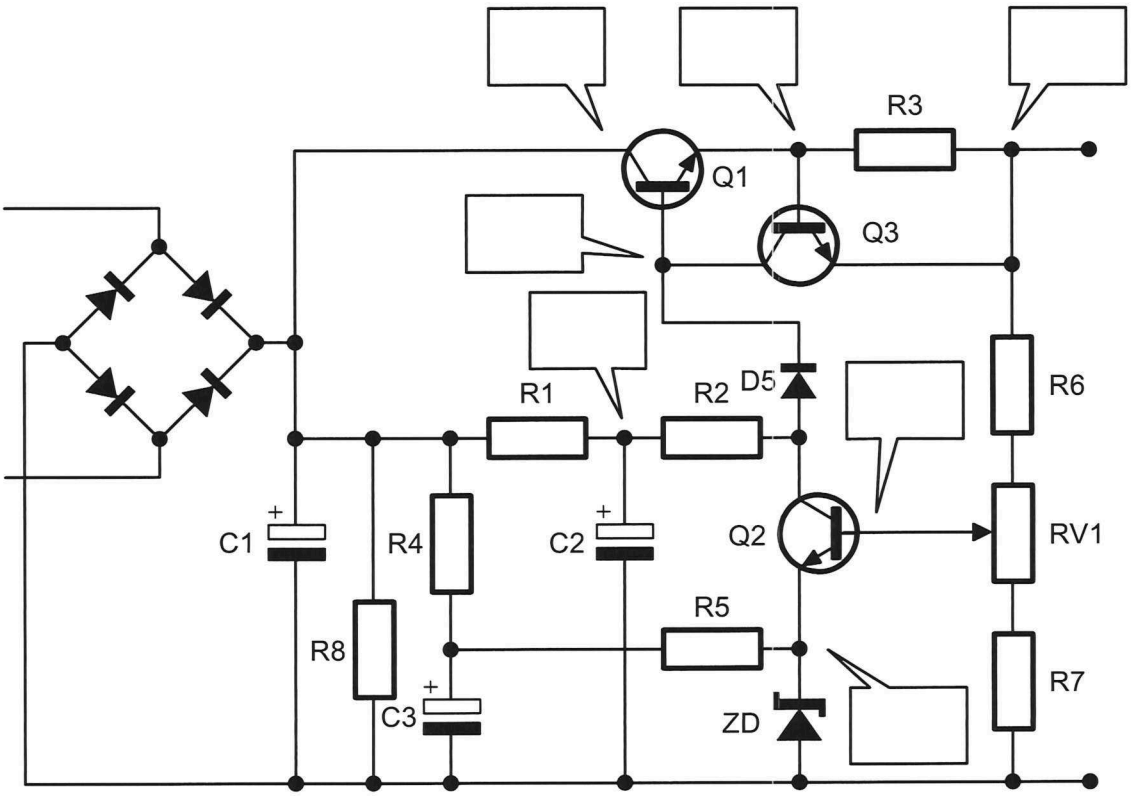

Figure 3

12 Identify the faulty component **and** what's wrong with it by comparing the voltages around the faulty circuit with the voltages in Figure 2 (on the previous page) and using the procedure explained on pages 3-18 to 3-23.

Fault 1 is: _____

_____

_____

The teacher needs to check your work at this point...

13 Return the fault switch 1 to the normal position.

14 Repeat Steps 10 to 12 for fault switch 2.

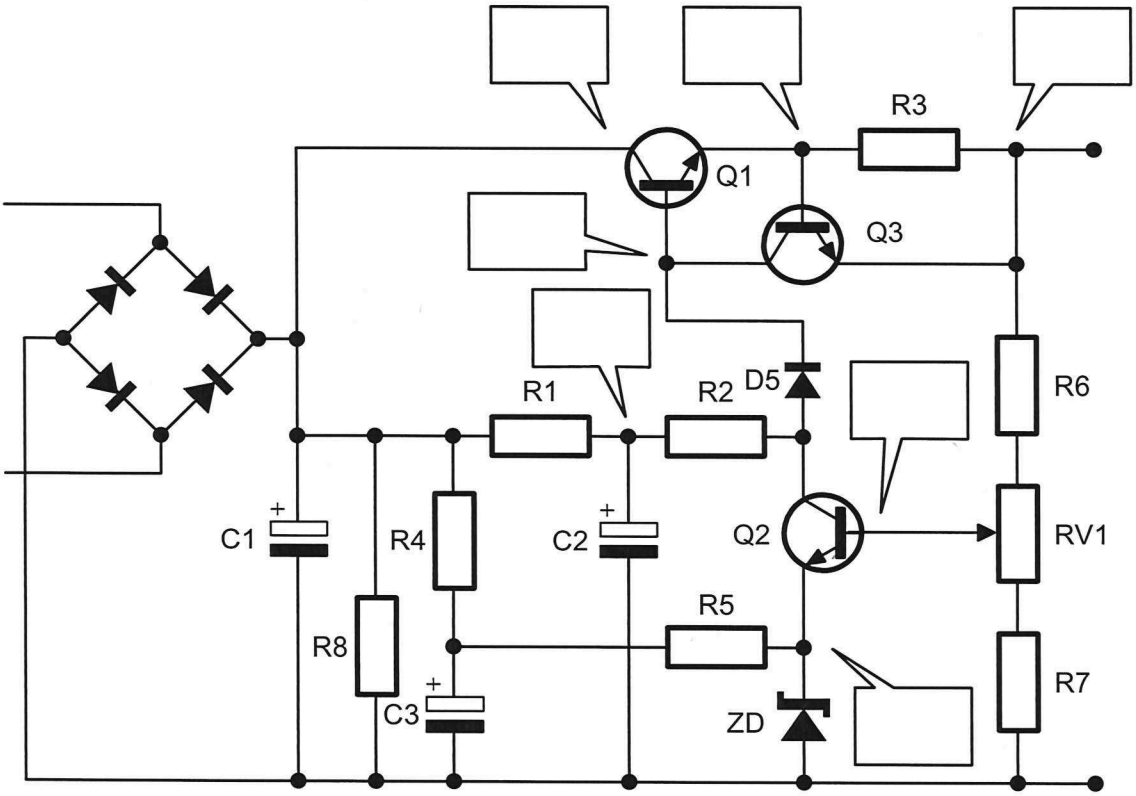

Figure 4

Fault 2 is: _____

_____

_____

The teacher needs to check your work at this point...

 Copyright: Not to be reproduced without permission

15 Return the fault switch 2 to the normal position.

16 Repeat Steps 10 to 12 for fault switch 3.

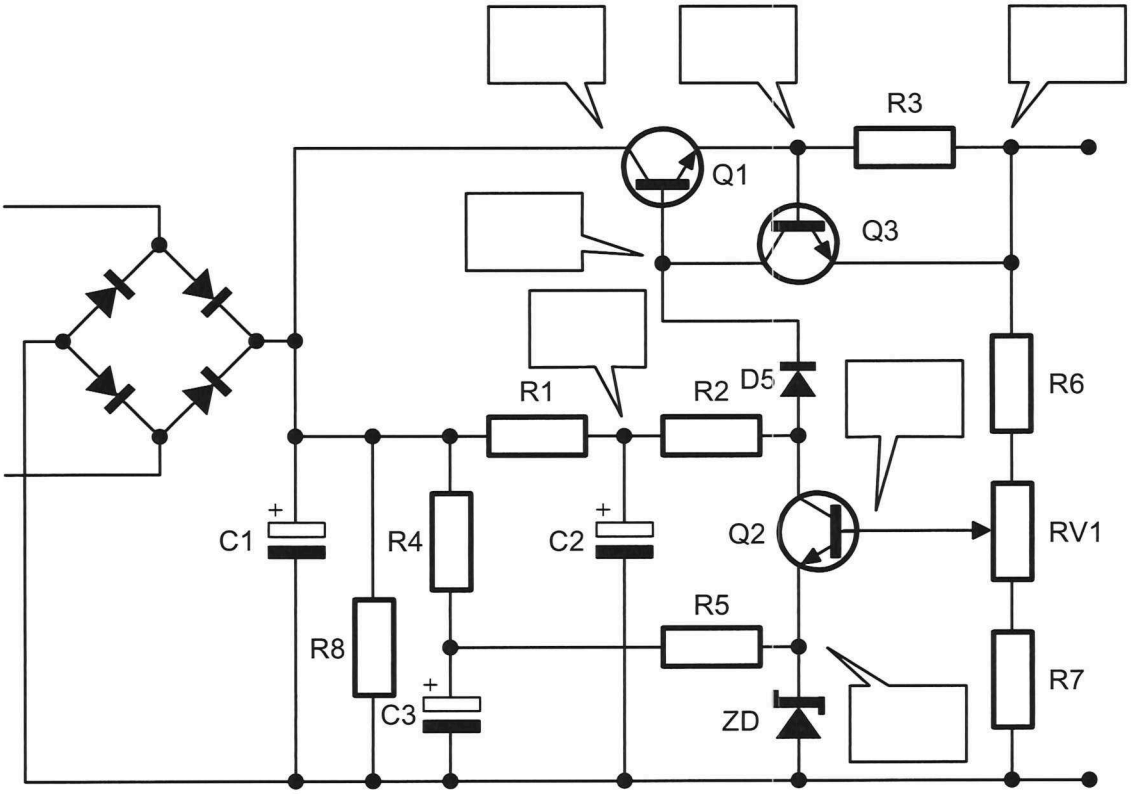

Figure 5

Fault 3 is: _____

_____

_____

The teacher needs to check your work at this point...

17 Return the fault switch 3 to the normal position.

18 Repeat Steps 10 to 12 for fault switch 4.

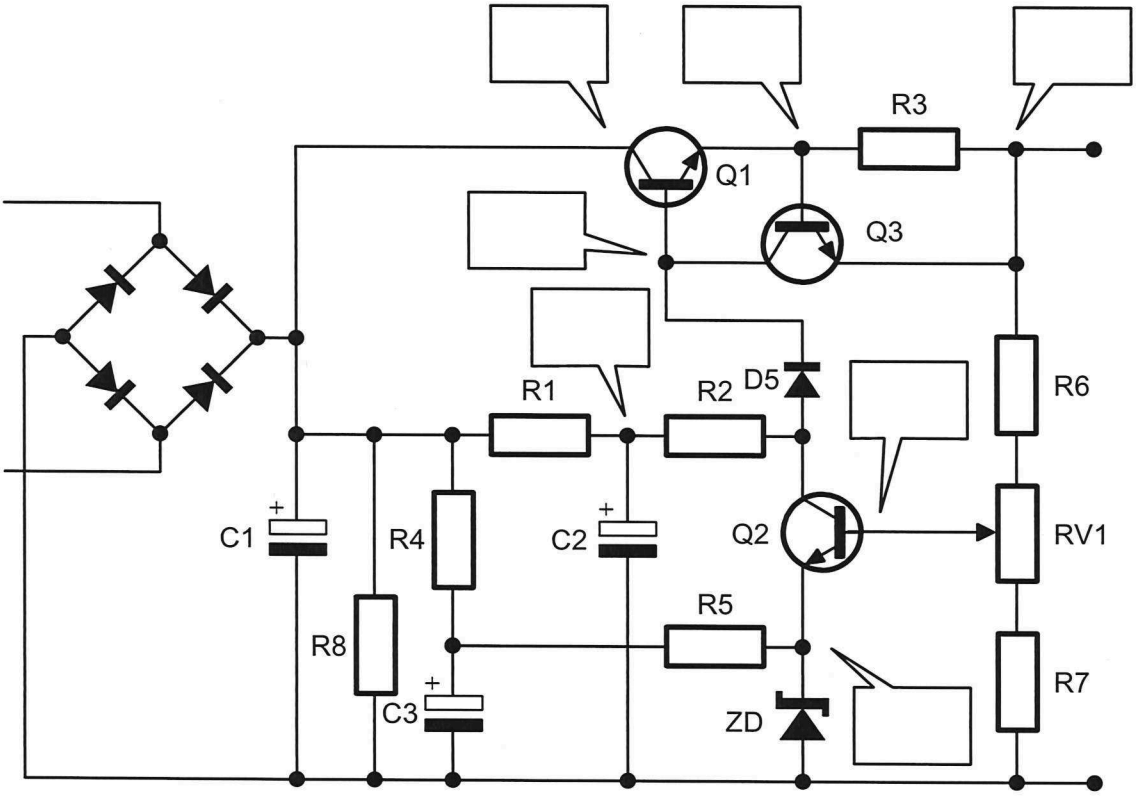

Figure 6

Fault 4 is: _____

_____

_____

The teacher needs to check your work at this point...

 Copyright: Not to be reproduced without permission

19 Return the fault switch 4 to the normal position.

20 Repeat Steps 10 to 12 for fault switch 5.

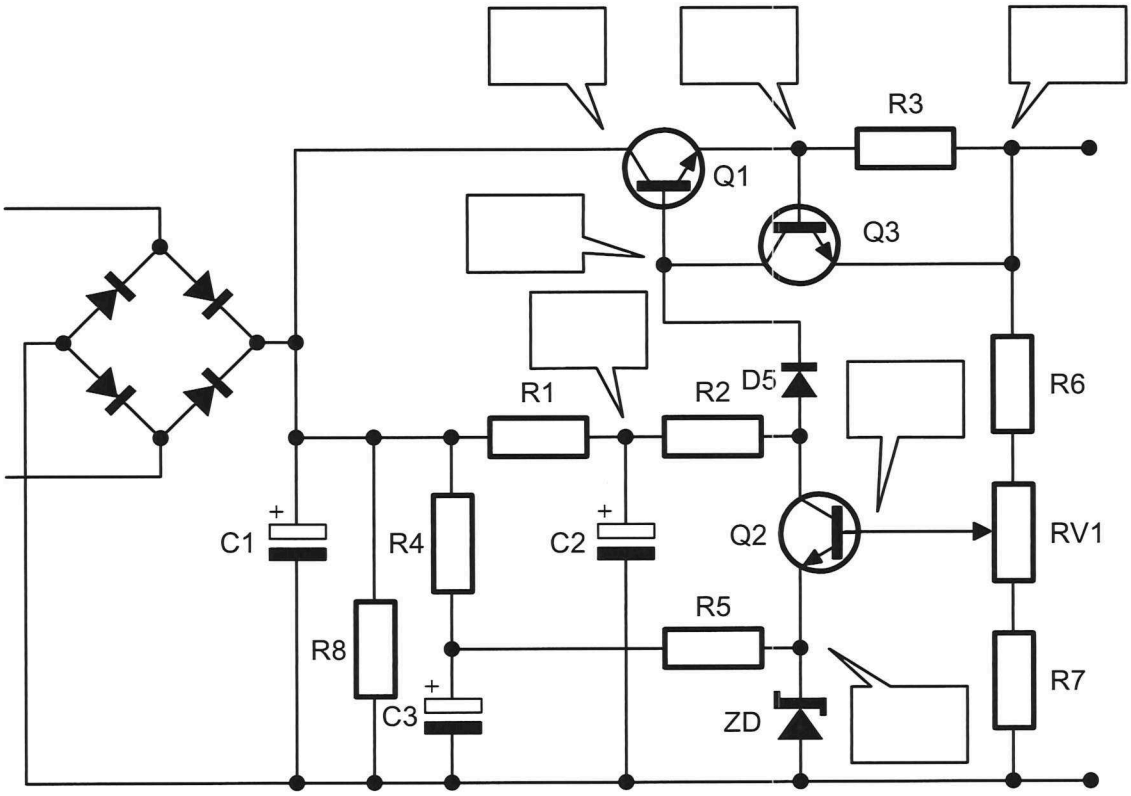

Figure 7

Fault 5 is: _____

_____

_____

The teacher needs to check your work at this point...

21 Return the fault switch 5 to the normal position.

22 Repeat Steps 10 to 12 for fault switch 6.

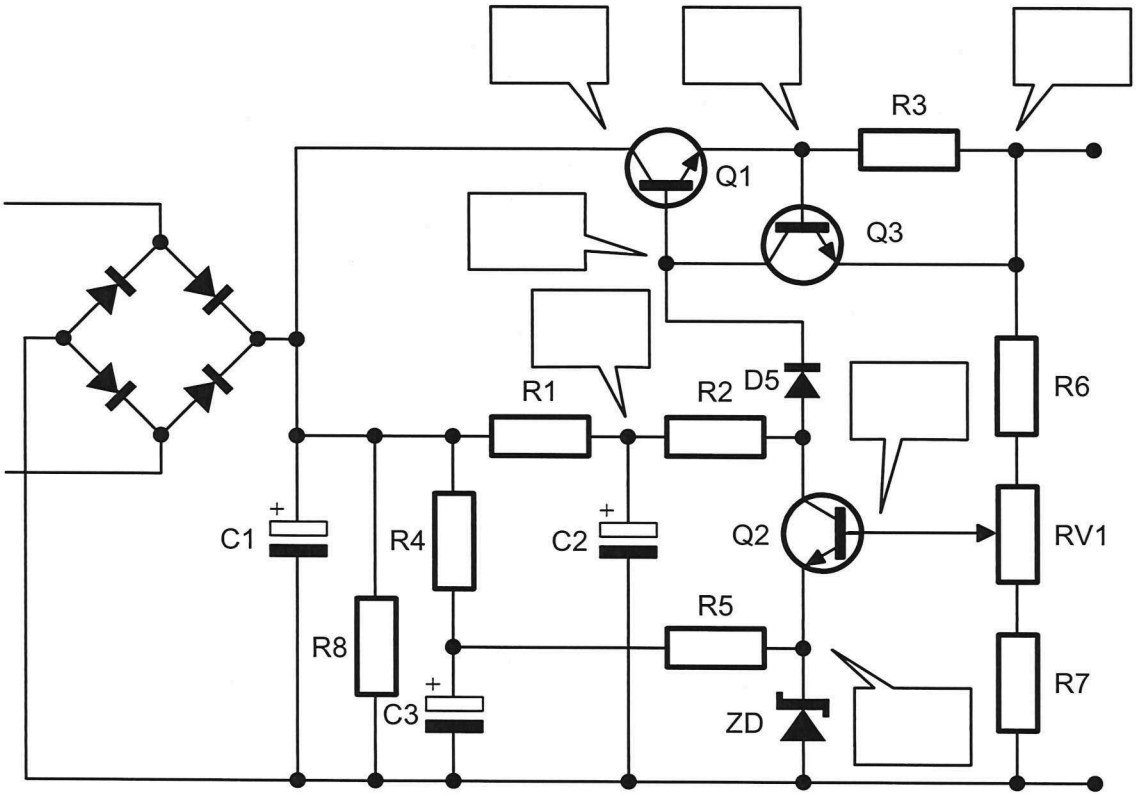

Figure 8

Fault 6 is: _____

_____

_____

The teacher needs to check your work at this point...

 Copyright: Not to be reproduced without permission

23 Return the fault switch 6 to the normal position.

24 Repeat Steps 10 to 12 for fault switch 7.

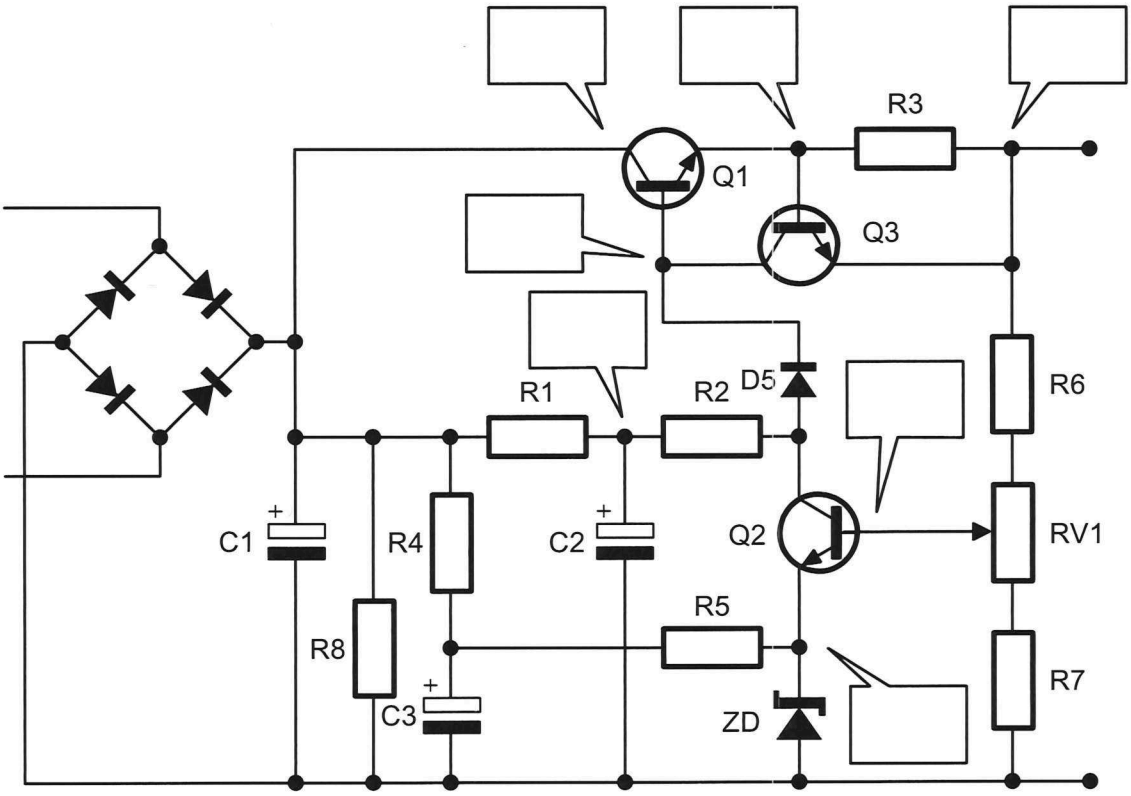

Figure 9

Fault 7 is: _____

_____

_____

The teacher needs to check your work at this point...

25 Return the fault switch 7 to the normal position.

26 Repeat Steps 10 to 12 for fault switch 8.

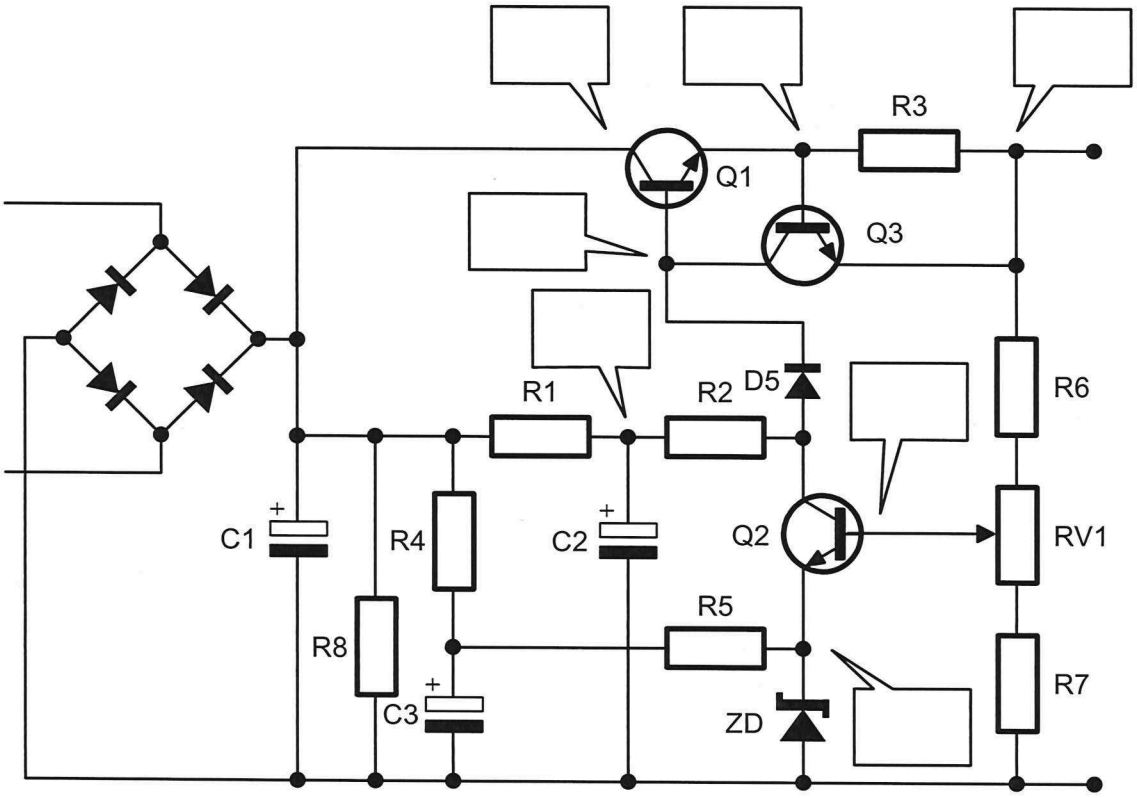

Figure 10

Fault 8 is: _____

_____

_____

The teacher needs to check your work at this point...

 Copyright: Not to be reproduced without permission

27 Return the fault switch 8 to the normal position.

28 Repeat Steps 10 to 12 for fault switch 9.

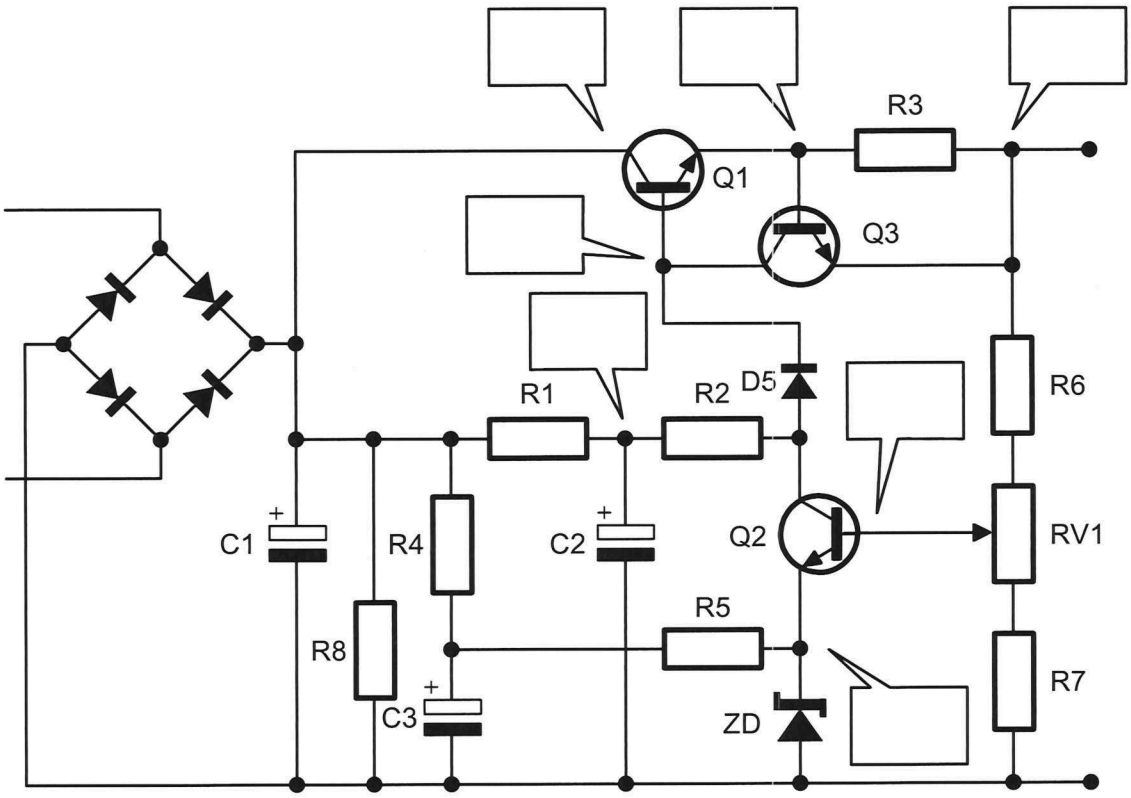

Figure 11

Fault 9 is: _____

_____

_____

The teacher needs to check your work at this point...

29 Return the fault switch 9 to the normal position.

30 Repeat Steps 10 to 12 for fault switch 10.

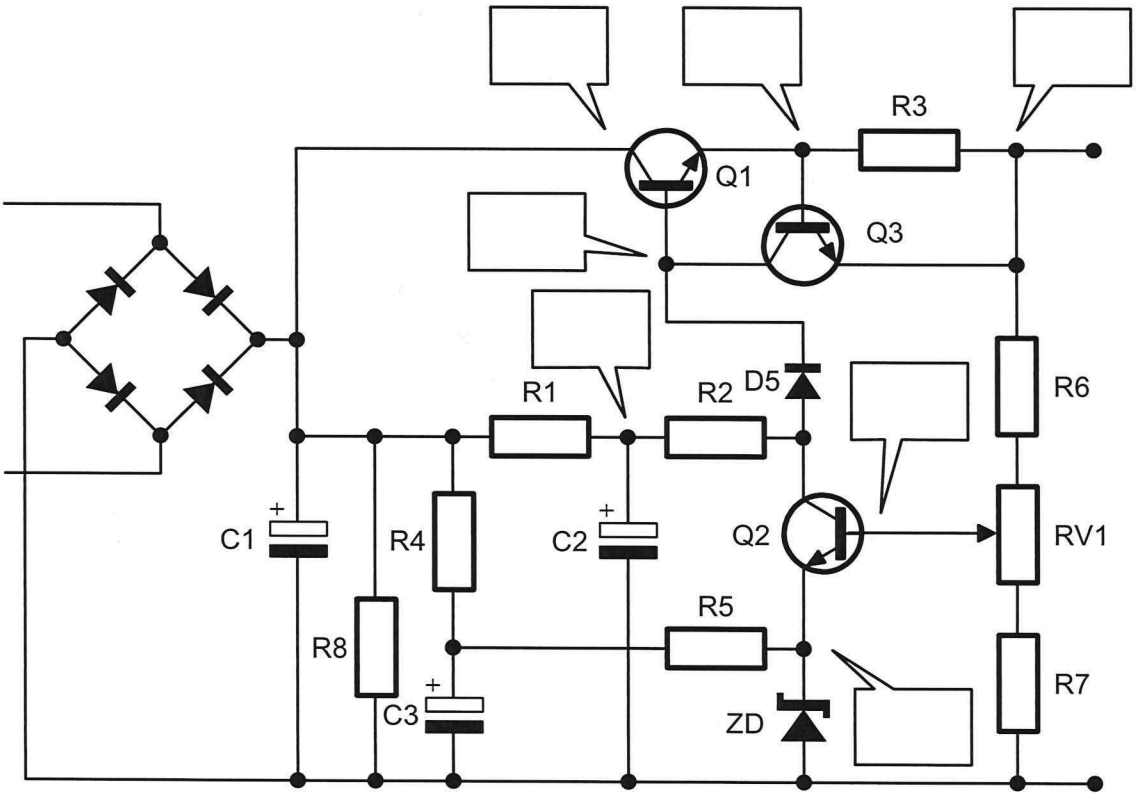

Figure 12

Fault 10 is: _____

_____

_____

The teacher needs to check your work at this point...

Copyright: Not to be reproduced without permission

Student notes

Review questions

Answer these questions to check your understanding of what you have learnt for this chapter. Doing this will also help to prepare you for the tests.

1 Error amplification in series regulators

- ☐ improves load regulation only.
- ☐ improves line regulation only.
- ☐ improves both load and line regulation.
- ☐ doesn't affect either load or line regulation.

2 Briefly explain why error amplification improves load regulation?

_____

_____

_____

_____

3 Draw the general **block diagram** for series regulation circuits with error amplification.

 Copyright: Not to be reproduced without permission

Questions 4 to 9 refer to the circuit in Figure 1 below

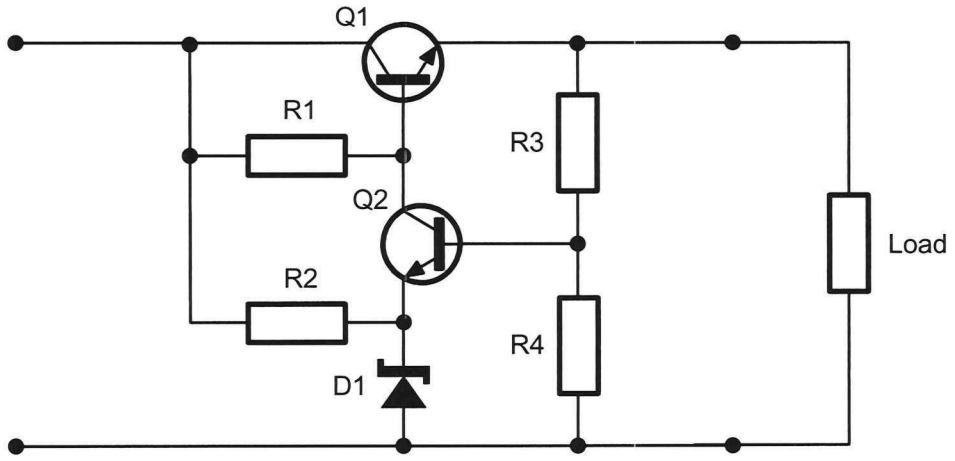

Figure 1

4 Which components implement the reference voltage?

- ☐ R1 and D1
- ☐ R3 and R4
- ☐ R2 and D1
- ☐ R1 and Q2

5 Which components implement the sampling network?

- ☐ R1 and D1
- ☐ R3 and R4
- ☐ R2 and D1
- ☐ R1 and Q2

6 Which component or components implement the comparator?

- ☐ R3 and R4
- ☐ Q1
- ☐ Q2
- ☐ R2 and D1

7 Which component or components implement the error amplifier?

- ☐ R3 and R4
- ☐ Q1
- ☐ Q2
- ☐ R2 and D1

8 What's another name for the transistor *Q1*?

_____

9 What two devices can be used instead of a zener diode to improve the circuit's line regulation?

_____

_____

Questions 10 to 16 refer to the circuit in Figure 2 below

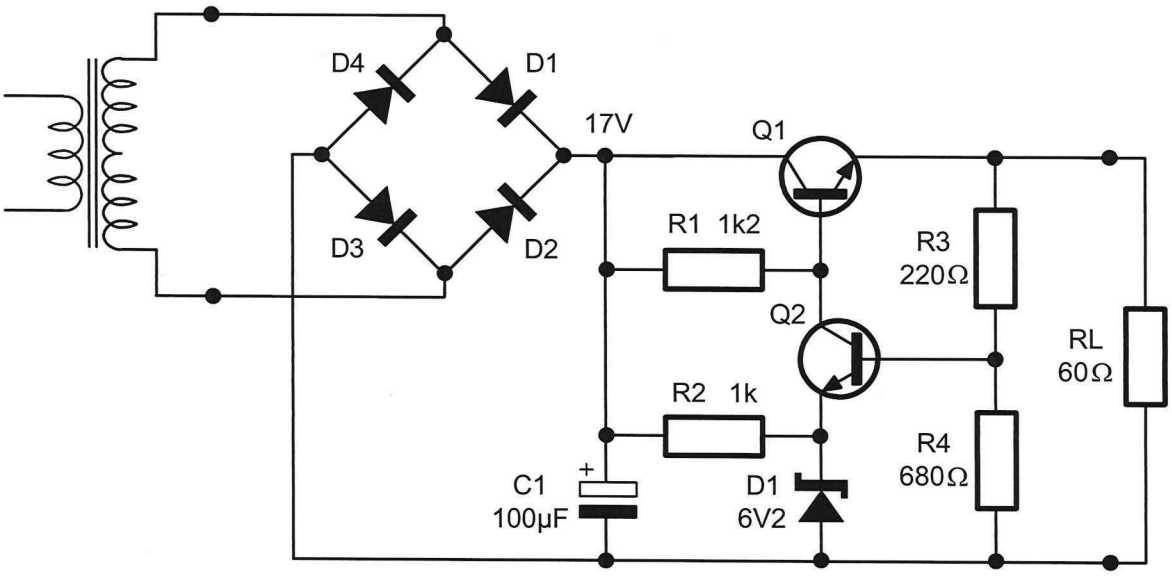

Figure 2

 Copyright: Not to be reproduced without permission

10 What is the voltage on the emitter of *Q2* ($V_{E(Q2)}$)?

11 Calculate the voltage on the base of *Q2* ($V_{B(Q2)}$).

12 Calculate the output voltage (*Vout*).

13 Calculate the voltage on the base of the pass transistor ($V_{B(Q1)}$).

14 Calculate the potential difference across the collector and emitter pins of *Q1* ($V_{CE(Q1)}$).

15 Calculate the load current.

16 Calculate the power dissipated by the pass transistor (*Q1*).

Questions 17 to 20 refer to the circuit in Figure 3 below

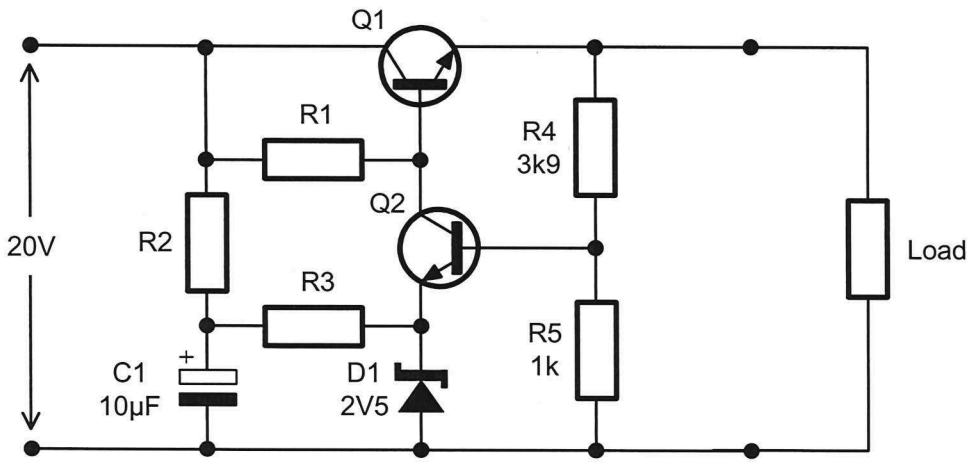

Figure 3

17 Calculate the output voltage (*Vout*).

18 What performance characteristic of this circuit does *C1* improve?

19 Explain why *D1* is probably a bandgap reference diode.

 Copyright: Not to be reproduced without permission

20 What is the likely fault if the output voltage is 3.1V?

- ☐ R4 high
- ☐ D1 short
- ☐ D1 open
- ☐ R5 open

Questions 21 and 22 refer to the circuit in Figure 4 below

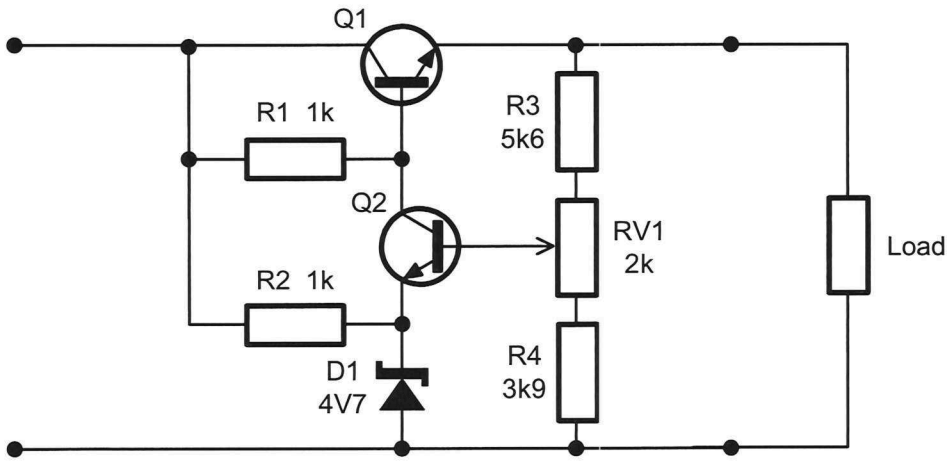

Figure 4

21 Calculate the circuit's minimum output voltage.

22 Calculate the circuit's maximum output voltage.

Questions 23 and 24 refer to the circuit in Figure 5 below

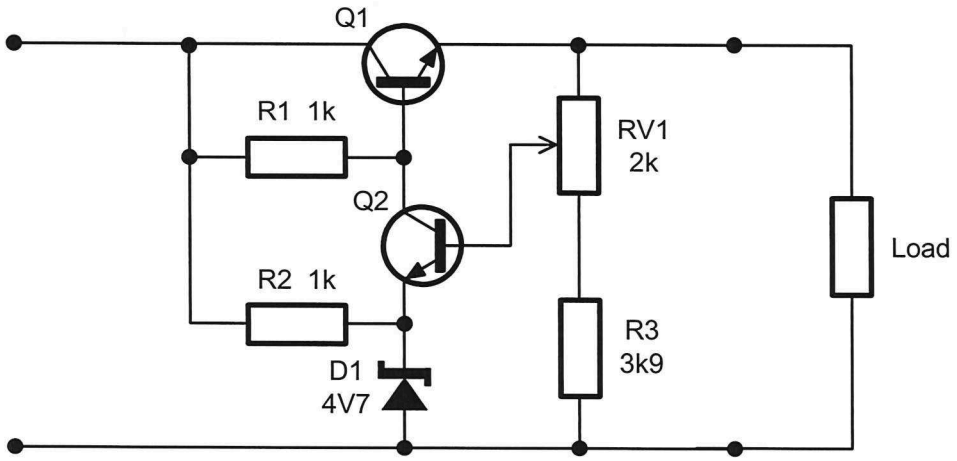

Figure 5

23 What is the circuit's minimum output voltage?

24 Calculate the circuit's maximum output voltage.

Copyright: Not to be reproduced without permission

Student notes

Section 4 Series regulator circuits with closed-loop control using op amp error amplification

Purpose To develop your ability to locate a faulty component in faulty closed loop regulator circuit using op amp error amplification.

Objectives At the end of this section you should be able to:

- Recognise the circuit of a series regulator with op amp error amplification (fixed and variable output)
- Describe the function of every component in a series regulator with op amp error amplification (fixed and variable output)
- Predict the voltages around the circuit of a series regulator with BJT error amplification (fixed and variable output)
- Locate simulated faults in a series regulator with BJT error amplification
- Use typical test equipment to observe the effects of common faults on the voltages in series regulator circuits with closed-loop control using op amp error amplification.

 Copyright: Not to be reproduced without permission

Introduction

Despite the good level of load regulation that the series regulator discussed in Section 3, it can be improved further by increasing the gain of the feedback network to provide a sharper correction response to errors on the output. This could be done with cascaded BJT stages but a better option is to use an op amp instead as these devices have open-loop gains that exceed 200,000. This chapter discusses series regulator with op amp error amplification.

The series regulator with op amp error amplification

Figure 1 below shows the circuit of a series regulator that uses an op amp for error amplification instead of a BJT.

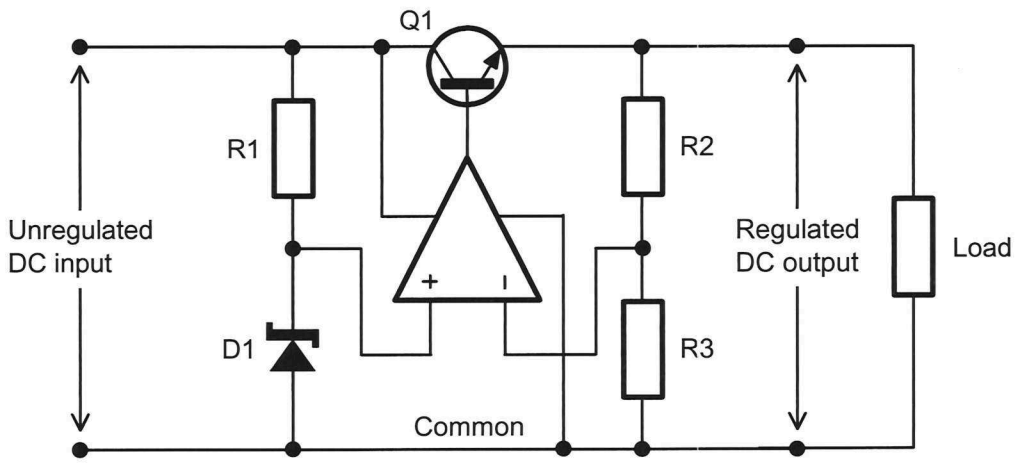

Figure 1 *Series regulator with op amp error amplification*

There are three important points that need make about the op amp's power supply connections in Figure 1.

- First, while these connections are shown, op amps always need a power supply and so they're usually not shown and it's understood that they must be there. You'll notice that these connections are not shown in any further drawings of this circuit.

- Second, the op amp must be a single-rail device (ie one that has V_{CC} and common connections instead of $\pm V_{CC}$ connections) because it is operating inside a single rail circuit. Care needs taking when implementing this circuit because a dual rail op amp cannot be used.

- Third, the op amp's V_{CC} is connected to the unregulated power supply's output and this is completely fine to do. Op amps typically operate over a range of power supply voltages and so it won't matter in this circuit when the unregulated power supply's output voltage varies.

The operation of this circuit is very similar to the operation of the circuit in Section 3:

- Supposing the load's resistance drops. This would want to cause the potential difference across it (and therefore the output voltage) to drop also because a smaller resistor has a smaller potential difference across it.
- As *R3* and *R4* are connected in parallel with the load/output, the drop in load voltage produces a corresponding drop in the potential differences across *R3* and *R4*.
- A drop in the potential difference across *R4* means that the voltage on the op amp's inverting pin drops also.
- This means that the potential difference between the op amp's inputs gets bigger and more positive (though we're still only talking about a difference in microvolts) which, in turn, causes the op amp's output voltage to get bigger.
- As the op amp's output is connected to the base of *Q1*, if the op amp's output goes up then $V_{B(Q1)}$ goes up too.
- With that, the voltage on the emitter and base of the pass transistor ($V_{B(Q1)}$ and $V_{E(Q1)}$) are moving in opposite directions. $V_{E(Q1)}$ is going down because of the drop in load voltage and $V_{B(Q1)}$ is going up as a result of that.
- The net effect of this is a bigger increase in the base-emitter voltage of the pass transistor ($V_{BE(Q1)}$) for the same change in load resistance than there would have been without error amplification. This turns the pass transistor on more increasing its collector current and hence the load current.
- This causes the potential difference across the load to increase back to the correct level.

Just like the circuit described in Section 3, the inclusion of the op amp makes errors on the regulator's output seem bigger to the pass transistor than they really are. This causes the correction to occur more sharply than the circuit with BJT error amplification so the load regulation performance is even better.

 Copyright: Not to be reproduced without permission

Figure 2 below shows which components in the circuit of Figure 1 implement the functional block of the generic block diagram for series regulators with error amplification.

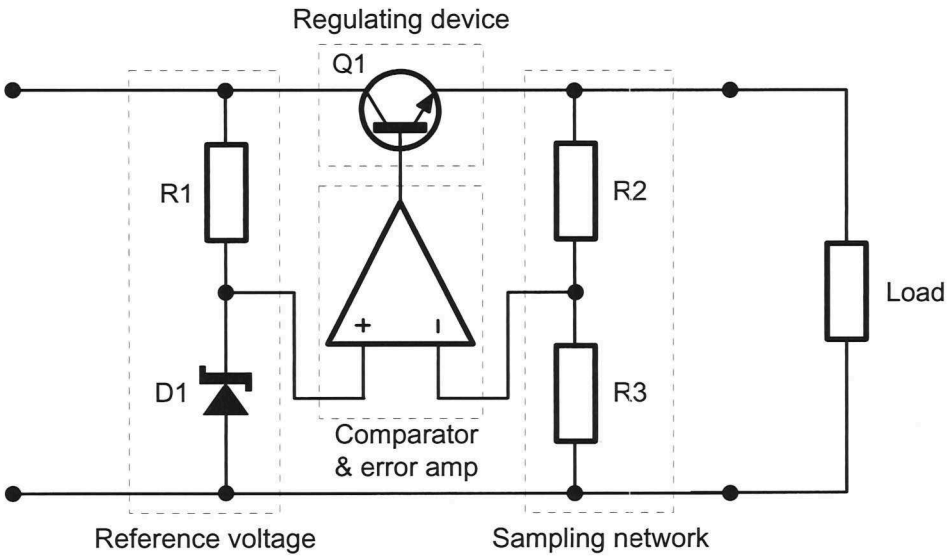

Figure 2 *The circuit in Figure 1 showing which components implement the blocks of the generic block diagram for series regulators with error amplification (see Figure 4 on page 3-12)*

As you can see, *R1* and *D1* form the reference voltage which provides the necessary line regulation. Like the series regulators discussed in the previous chapter, *D1* can be a standard zener diode or, for improved line regulation, a temperature compensated zener diode (aka reference diode) or a bandgap voltage reference. Resistors *R2* and *R3* form the sampling network and the negative feedback for the op amp. *Q1* is the regulating device and the op amp implements the comparator and error amplifier in the same way as the second BJT in circuit described in Section 3.

The advantage of op amp error amplification

Both BJT and op amp error amplification provide for better load regulation than the simple circuit introduced in Section 1 because both make errors on the output cause larger changes across the pass transistor's base-emitter junction. However, between the two, op amp error amplification is better that BJT error amplification because their open-loop voltage gain is so much larger than the open-loop voltage gain of BJT amplifiers (hundreds of thousands versus hundreds). This means that errors on the output cause larger changes across the pass transistor's base-emitter junction than for BJT error amplification facilitating a sharper correction response.

Predicting key voltages around the circuit

Naturally, you're expected to be able to analyse circuits like the one shown in Figure 1 to predict voltages at key points. Fortunately, the analysis is almost identical to the analysis of the series regulator with BJT error amplification. Like that circuit, the potential difference across the zener diode is fixed (ideally) which gives a very handy starting point.

1 Determine the voltage on the op amp's non-inverting input ($V_{\oplus}$):

$$V_{\oplus} = V_{REF} \qquad \text{Where: } V_{REF} = V_{D1}$$

2 Use $V_{\oplus}$ to determine the potential difference across *R3* (V_{R3}). Importantly, you'll recall that the potential difference between the non-inverting and inverting inputs of an op amp with negative feedback is so small that we can approximate it zero. That being the case:

$$V_{R3} = V_{\oplus}$$

3 Use V_{R3} to calculate the output voltage. This is a three-step process:

First, calculate the current through *R3* (I_{R3}):

$$I_{R3} = \frac{V_{R3}}{R3}$$

Next, use I_{R3} to calculate the potential difference across *R2* (V_{R2}):

$$V_{R2} = I_{R3} \times R2$$

Finally, find the output voltage (*Vout*):

$$Vout = V_{R2} + V_{R3}$$

 Copyright: Not to be reproduced without permission

4 Use *Vout* to calculate the voltage on the base of the pass transistor ($V_{B(Q1)}$). This also happens to be the voltage on the op amp's output.

$$V_{B(Q1)} = Vout + 0.6V$$

Calculating the power dissipated by the pass transistor
In some situations you may need to know the power dissipated by the pass transistor which is calculated using the equation:

$$P_{Q1} = V_{CE(Q1)} \times I_{RL}$$

Choosing an appropriate value for *R1*
You may also have to determine an appropriate value for *R1* which is calculated using the equation:

$$R1 = \frac{Vin_{(unregulated)} - V_{D1}}{I_{D1(\text{nom})}}$$

Practise using these equations by attempting the following questions for yourself.

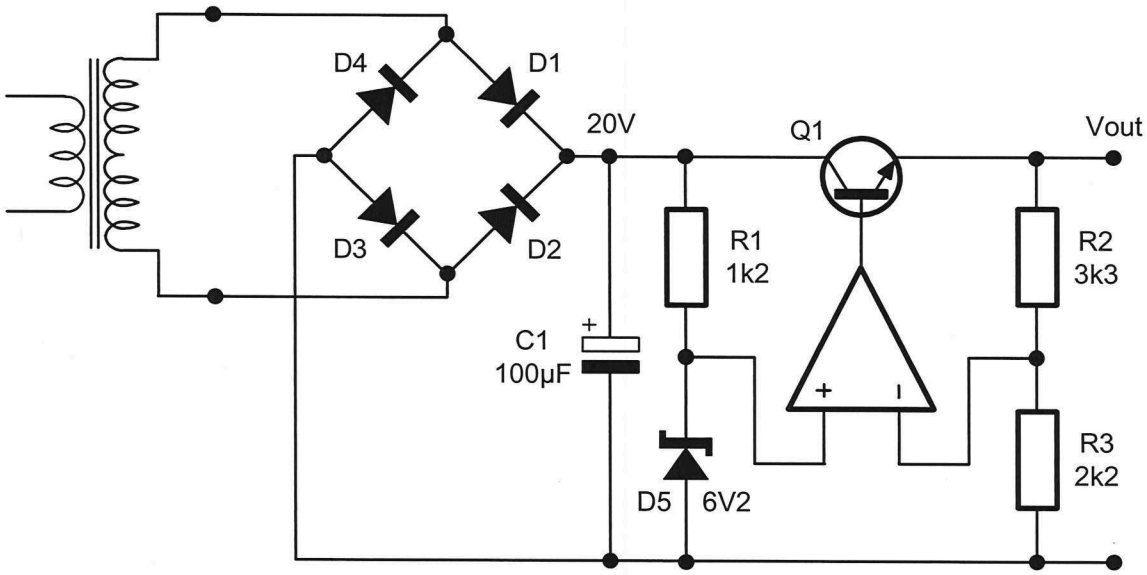

Figure 3

1 What is the voltage on the op amp's non-inverting input ($V_{\oplus}$)?

2 What is the potential difference across *R3* (V_{R3})?

3 Calculate the current through *R3* (I_{R3}).

4 Calculate the potential difference across *R2* (V_{R2}).

 Copyright: Not to be reproduced without permission

5 Calculate the output voltage (*Vout*).

6 Calculate the voltage on the base of the pass transistor ($V_{B(Q1)}$).

7 Calculate the power dissipated by the pass transistor (P_{Q1}) for a load resistance of 45Ω.

Recall from the previous chapter that there is a one-step method of calculating the series regulator's output voltage and it's true for this variation of the circuit too. The equation is shown below:

$$Vout = V_{REF} \times \left(\frac{R2}{R3} + 1\right)$$

Practise using this equation to calculate the output voltage of the circuit in Figure 3 on page 4-7. You should obtain the voltage as your answer to Question 6 on page 4-8.

 Copyright: Not to be reproduced without permission

The series reg. with op amp error amplification as non-inverting amplifier

If you remember your op amp theory well, you may have recognised that the equation on the previous page is the same as the equation for calculating the output voltage of a non-inverting amplifier.

This is not a coincidence! The circuit of a series regulator with op amp error amplification is effectively a non-inverting amplifier with a fixed input voltage (the reference voltage). To emphasise this point, the circuit is redrawn in Figure 4 below in the conventional way that non-inverting amplifiers are drawn.

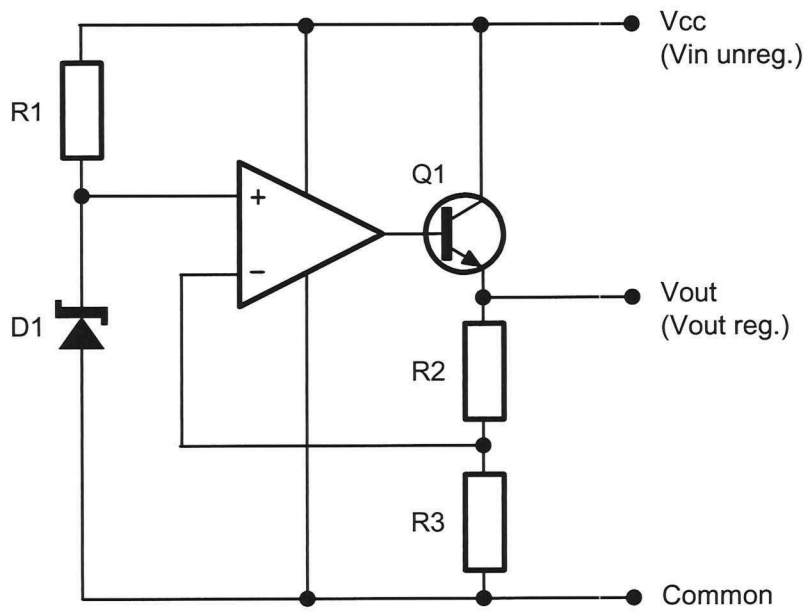

Figure 4 *The circuit in Figure 1 redrawn to show that it is effectively a non-inverting amplifier*

Thinking about the regulator circuit this way also allows you to use a great trick for fault-finding closed-loop op amp circuits that you have been taught (as you will see later this chapter).

The series regulator with an adjustable output voltage

As you have seen, the size of output voltage of the series regulator in this chapter depends on the size of the reference voltage and the values of the resistors in the sampling network. This allows the circuit's output voltage to be "programmed" to any value by choosing appropriate values for these components.

It also allows for the circuit's output voltage to be made variable. Examples of how this can be done are shown in Figure 5 and 6 below.

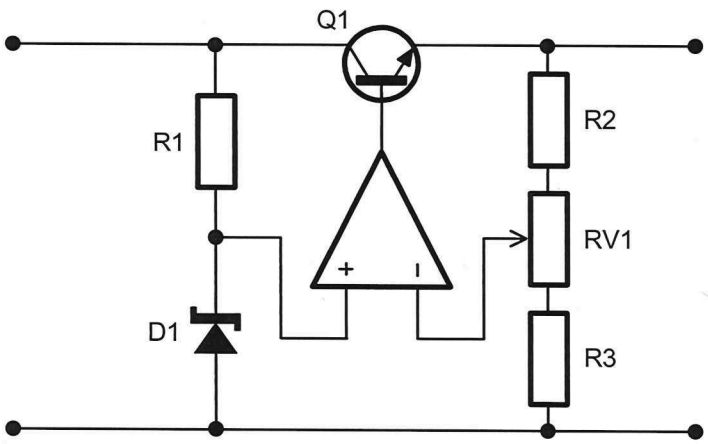

Figure 5 *Series regulator with op amp error amplification and variable output voltage*

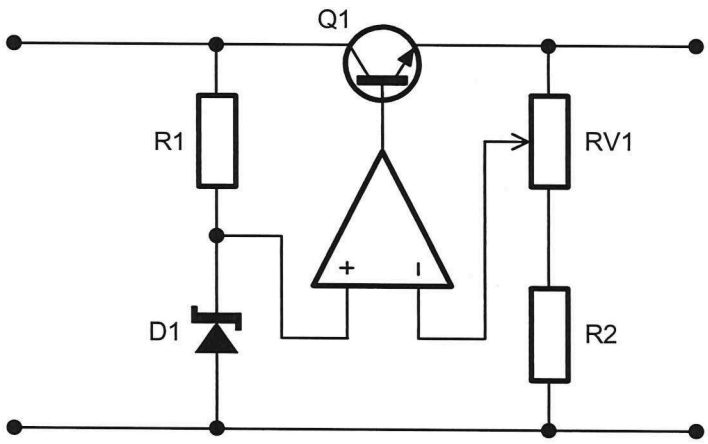

Figure 6 *Series regulator with op amp error amplification and variable output voltage*

 Copyright: Not to be reproduced without permission

When the potentiometer in these circuits is at the bottom of their travel, the output voltage is maximum because the resistance between the output and the op amp's inverting input is biggest while the resistance between the op amp's inverting input and common is smallest. This is shown in Figures 7 and 8 together with the equations for calculating the maximum output voltage.

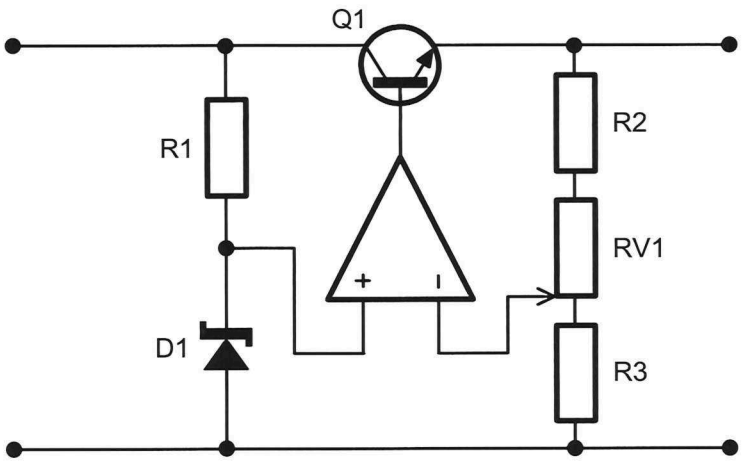

$$Vout_{(\max)} = V_{REF} \times \left(\frac{R2+RV1}{R3} + 1 \right)$$

Figure 7

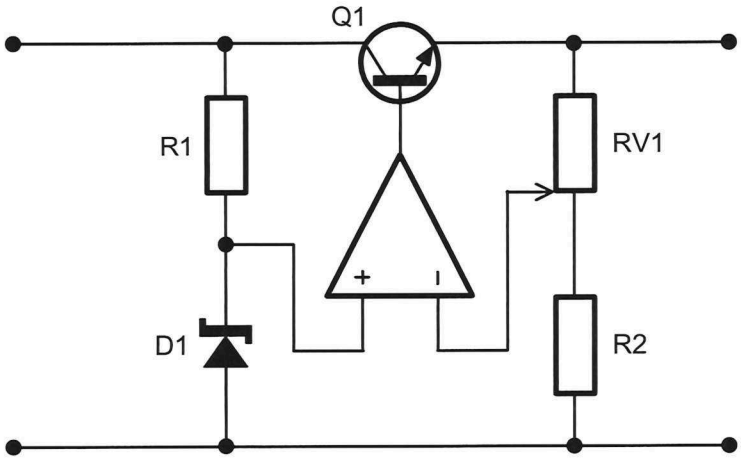

$$Vout_{(\max)} = V_{REF} \times \left(\frac{RV1}{R2} + 1 \right)$$

Figure 8

When the potentiometer of these circuits is at the top of its travel, the output voltage is minimum because the resistance between the output and the op amp's inverting input is smallest while the resistance between the op amp's inverting input and common is biggest. This is shown in Figures 9 and 10 together with the equations for calculating the minimum output voltage.

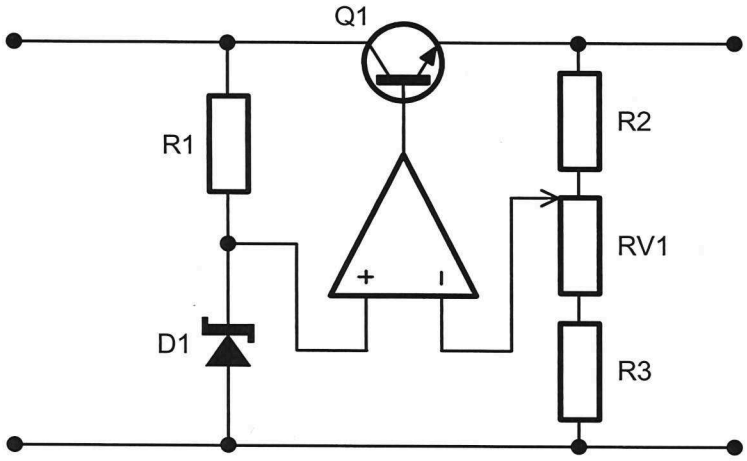

$$Vout_{(\min)} = V_{REF} \times \left(\frac{R2}{RV1+R3} + 1 \right)$$

Figure 9

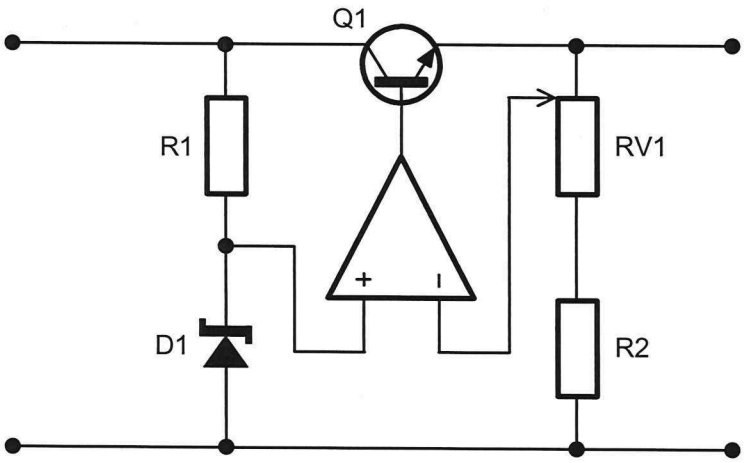

$$Vout_{(\min)} = V_{REF}$$

Figure 10

 Copyright: Not to be reproduced without permission

Minor circuit variations for improved performance

Figure 111 below shows the series regulator with op amp error amplification with the reference voltage supplied via an RC network. This effectively immunises the zener diode's potential difference (and hence the output voltage) from line transients. A detailed explanation of how the RC network achieves this is provided in Section 1 (see pages 1-14 to 1-16).

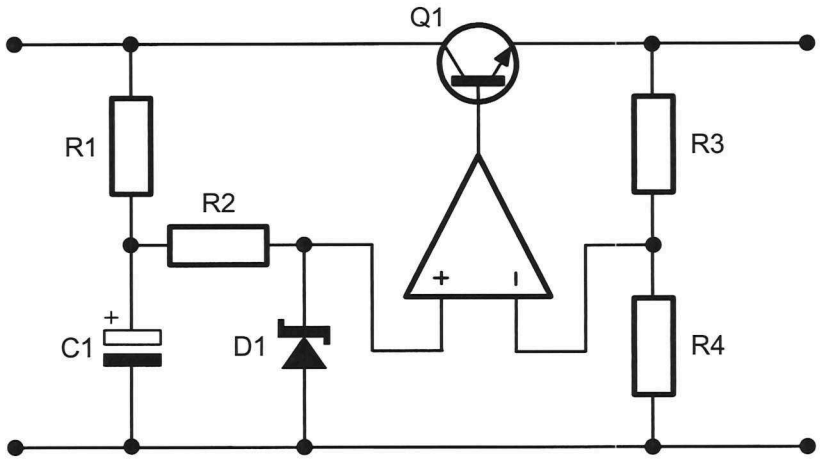

Figure 11 *Series regulator with op amp error amplification and improved transient response*

Figure 12 below shows the series regulator with op amp error correction and a *frequency compensation capacitor* (*C1*).

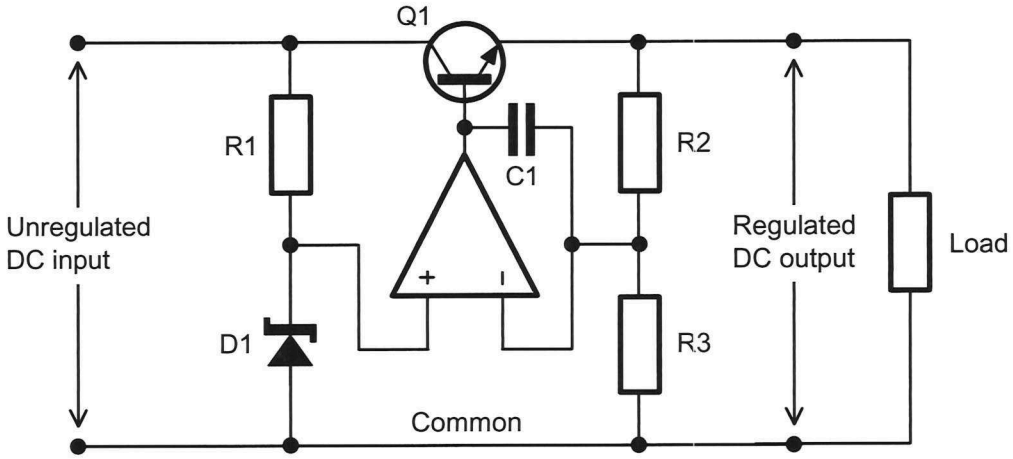

Figure 12 *Series regulator with op amp error amplification and frequency compensation*

The capacitor provides some frequency selective local negative feedback for the op amp. Its value (typically 100pF and less) ensures that the gain of the op amp is only 1 at high frequencies reducing the risk of the circuit becoming a high frequency oscillator as well as a series regulator.

Fault finding

As with fault-finding the complete series regulated power supply in Section 3, there is a procedure that many technicians would follow when fault-finding the complete power supply circuit in Figure 13 below.

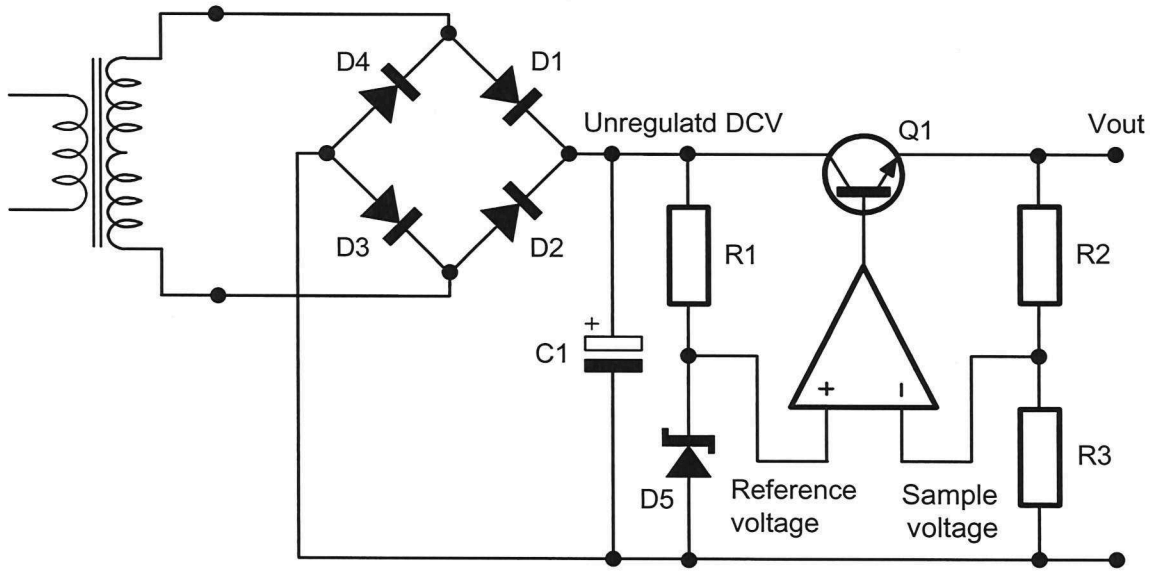

Figure 13

Step 1 - Check the regulator's output voltage

If the output voltage is fairly close to the value that it should be then the circuit is probably working correctly. That said, remember that you should measure *Vout* under both light and heavy load conditions. Heavy loads are achieved by operating the load in modes that will cause it to draw more current.

Step 2 - Check the unregulated DC voltage

This is the voltage at the junction of *D1*, *D2* and *C1* measured with respect to common. If it's 0V then there must be a problem with the unregulated power supply portion of the circuit. This would include: the mains fuse has blown; a winding on the transformer is open-circuit; or two or more diodes are open-circuit.

That said, if the unregulated DC voltage is not 0V, but also not the value that it should be, it doesn't necessarily mean that the problem must be with the unregulated power supply. If this voltage has dropped by up to about 20% (this figure is a guide only), it's possible that, being unregulated, this voltage has gone down due to the loading caused by the fault. Keep this in mind as you on go to Step 3.

 Copyright: Not to be reproduced without permission

If this voltage has dropped by more than about 20% (again, this figure is a guide only), it would indicate that there's a fault in the unregulated power supply portion of the circuit. So, investigate this before going to Step 3. Look at the unregulated DC voltage using a CRO to see whether there is more ripple than there should be and/or whether its frequency has changed. Then, draw on your knowledge of unregulated power supplies to identify the faulty component.

Step 3 - Measure the reference voltage

Recall that the reference voltage is the voltage at the junction of the zener diode and the op amp's non-inverting input. This is indicated in Figure 14 below.

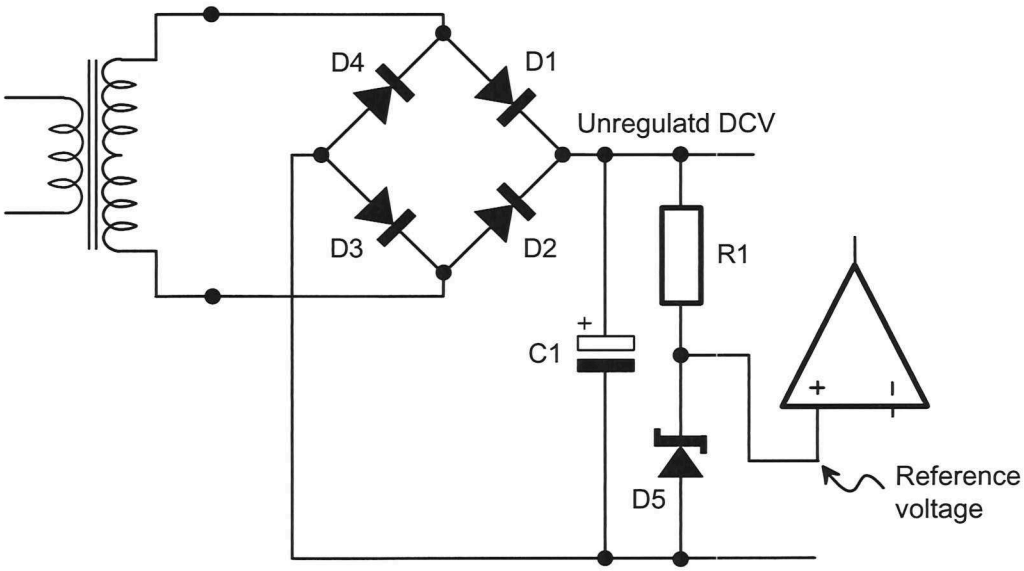

Figure 14

For the series regulator to work and have the correct output voltage, the reference voltage must be a value close to the diode's rated zennering voltage. If it's not, the problem must be with either *R2* or *D5*.

Step 4 - Measure the sample voltage (also known as the feedback voltage)

This is the voltage on the op amp's inverting input measured with respect to common and is indicated in Figure 15 below.

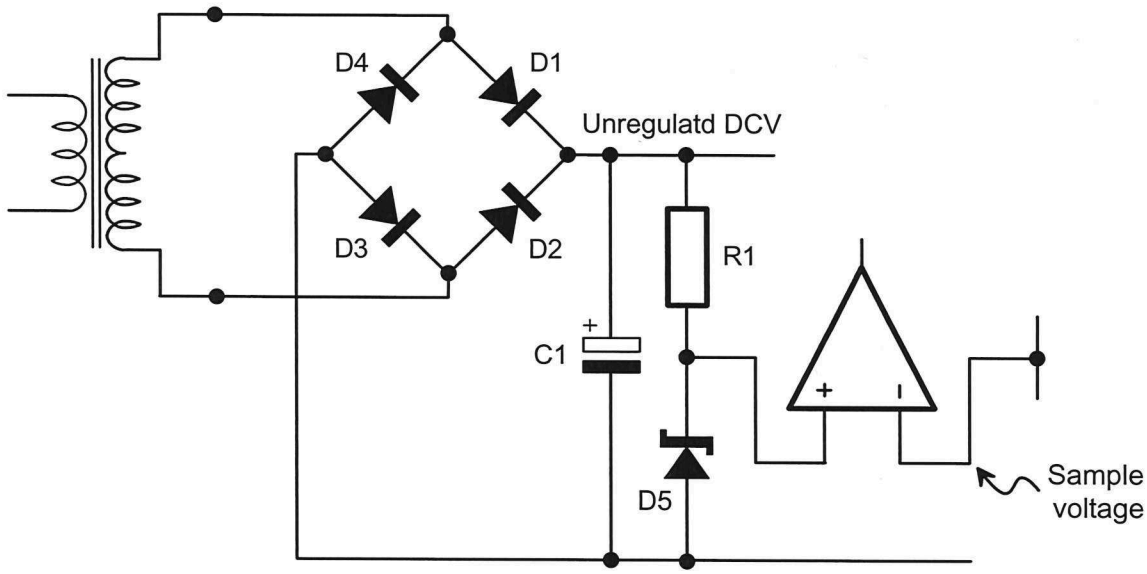

Figure 15

You have previously learnt that, for op amps with negative feedback, the potential difference between their non-inverting and inverting inputs is so small that it's effectively 0V.

So, if you measure the sample voltage and its the same as the reference voltage, you know that the loop is closed and the op amp is functional. This means that the problem must be one of the following: a) the reference voltage is incorrect (but, by this point in the procedure, you'd already know whether this is the case); b) the pass transistor's base-emitter is short-circuit; c) either *R2* or *R3* have gone high in value by some amount; or d) *R3* has gone open.

If the sample voltage is different to the reference voltage, you know that the loop is open (so broken). So, the problem must be one of the following: a) the op amp is faulty; b) the pass transistor is faulty in one of a number of ways; c) *R2* is very high in value or open-circuit.

 Copyright: Not to be reproduced without permission

Step 5 - Measure the voltages on the leads of the pass transistor

These are the remaining voltages that you would measure (with respect to common) and are indicated using the letter "X" in Figure 16 below. The letter "A" shows voltages you would already have measured for Steps 1 to 4 above.

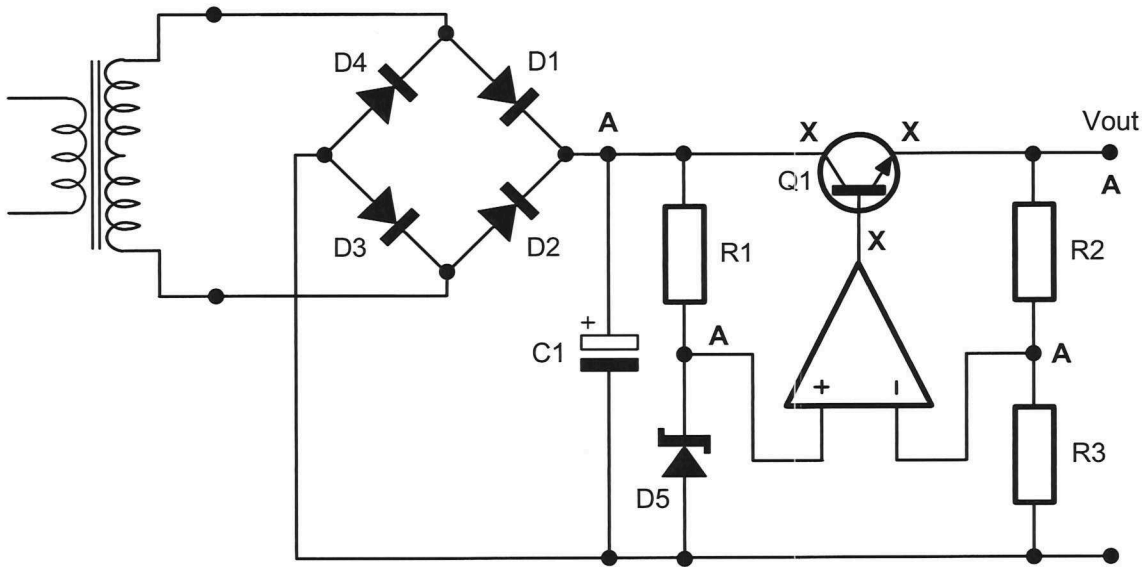

Figure 16

Having made this measurements, you must ask the following questions (usually in this order) to try to determine the fault:

- What's the potential difference between the base and emitter of *Q1*?

  If *Q1*'s base is about 0.6V higher than its emitter (so, for example, if *Q1's* base is 15.9V, and it's emitter is about 15.3V), then you know that this junction is ok. Importantly, this is true even if both voltages are not what they're supposed to be (so, for example, 19V and 19.6V when they should be 15.9V and 15.3V). So, the problem is with either *Q1's* collector or with another component and you move on to the next question (next bullet point).

  If *Q1's* base and emitter voltages are identical (or only tens of millivolts apart) then you know that this junction is short-circuit and you have found the problem.

  If *Q1*'s base is more than 0.6V and the regulator's output voltage is 0V then you know that this junction is open-circuit and you have found the problem.

  If *Q1*'s base is lower than its emitter then move on to the next question (next bullet point).

- What's the potential difference between the collector and emitter of *Q1*?

  If *Q1's* collector and emitter voltages are identical (or only tens of millivolts apart) then you know that these two leads are short-circuit and you have found the problem. If not, you move on to the next question (next bullet point).

- Even if all the voltages around the transistors are not what they should be, are they correct relative to each other (ie the emitter voltage is the lowest, the base voltage is 0.6V bigger than the emitter and the collector voltage is bigger again by more than a couple of hundred millivolts)?

  If so, you now use your understanding of how the circuit works to think about which of the remaining likely faults below would produce the measured values that you obtained.

  - *Q1* collector open-circuit
  - *R2* high in value
  - *R2* open-circuit
  - *R3* high-in value
  - *R3* open-circuit

 Copyright: Not to be reproduced without permission

The effects of likely faults

The following pages discuss the effects of the likely faults with the series regulator circuit introduced in this chapter. While the teacher may use these notes to assist in the teaching of the fault-finding process described from page 4-15, they're intended for you to read to deepen your understanding of how the circuit works and why the faults have the effects that they do on the circuit voltages.

To help you understand the fault's effects, they're based on the circuit in Figure 3 on Page 4-7. This circuit is shown again below for your convenience with key voltages around the circuit shown in bold (all with respect to common).

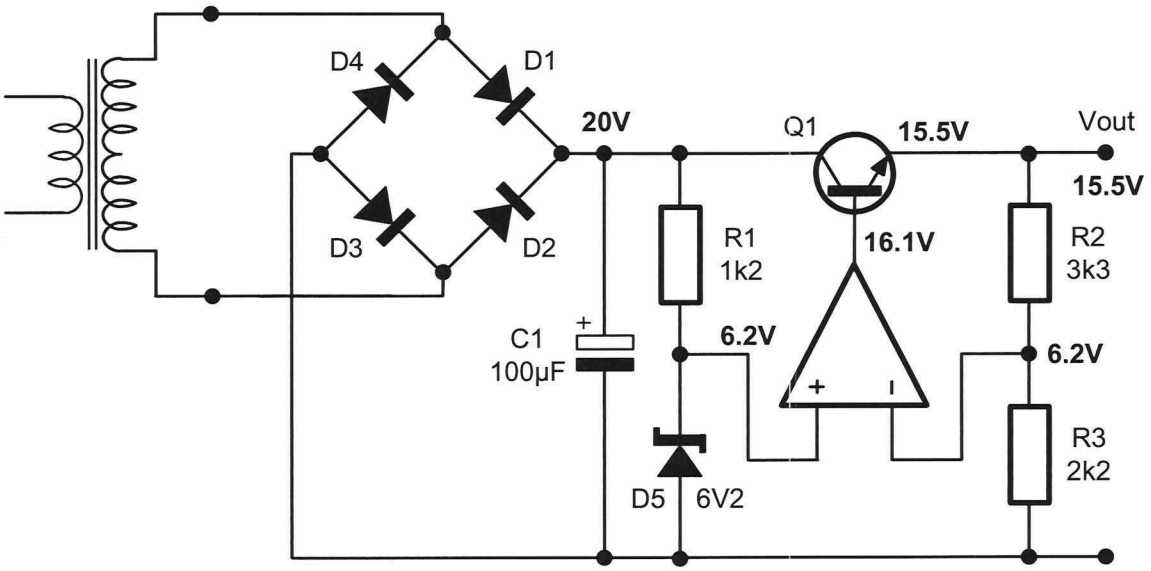

Figure 17

First, a few simplifications are made to help prevent the explanations from getting too long.

- The first simplification is that the unregulated DC voltage (20V in this example) doesn't change. In actual circuits, faults are likely to load the unregulated portion of the power supply by different amounts. So, this would cause the unregulated voltage to go down by different amounts depending on the regulator fault and how much of a load it presents to the unregulated circuit.

- The second simplification is that the regulator is unloaded (or only lightly loaded) for the initial description of the fault's symptoms. Further explanation is given for heavier loads where this would change the voltages that you would expect to see.

- The third simplification is that the zener diode's voltage is exactly 6.2V and never changes. In reality, the diode's zenering voltage is unlikely to be exactly the rated value in the first instance and will likely change too for various faults.

Most importantly, it's **not** recommended that you try to memorise these fault conditions, there are just too many. Instead, go through the procedure for each fault and work out at which step you would identify the fault. For a few of them, you would have to go all the way to Step 5. In which case, think about what clues there are in the voltage measurements that would tell you what the fault probably is. The explanations for the faults will help in this.

 Copyright: Not to be reproduced without permission

- *Q1* short-circuit collector-emitter

Figure 18 shows what happens around the circuit when *Q1* goes short-circuit between its collector and emitter leads. As you can see, the regulator's input and output voltages are the same as each other (though there may be small differences between them in the order of tens of millivolts). In the process, it becomes impossible for *Q1's* base to be 0.6V higher than its emitter and so *Q1's* base-emitter p-n junction turns off. This breaks the negative feedback path for the op amp and so it operates as a comparator instead. As the voltage on the op amp's inverting pin is 8V (due to the voltage divider formed by *R2* and *R3*), its greater than the voltage on its non-inverting pin (which is unchanged at 6.2V) and so the op amp's output drops to almost 0V.

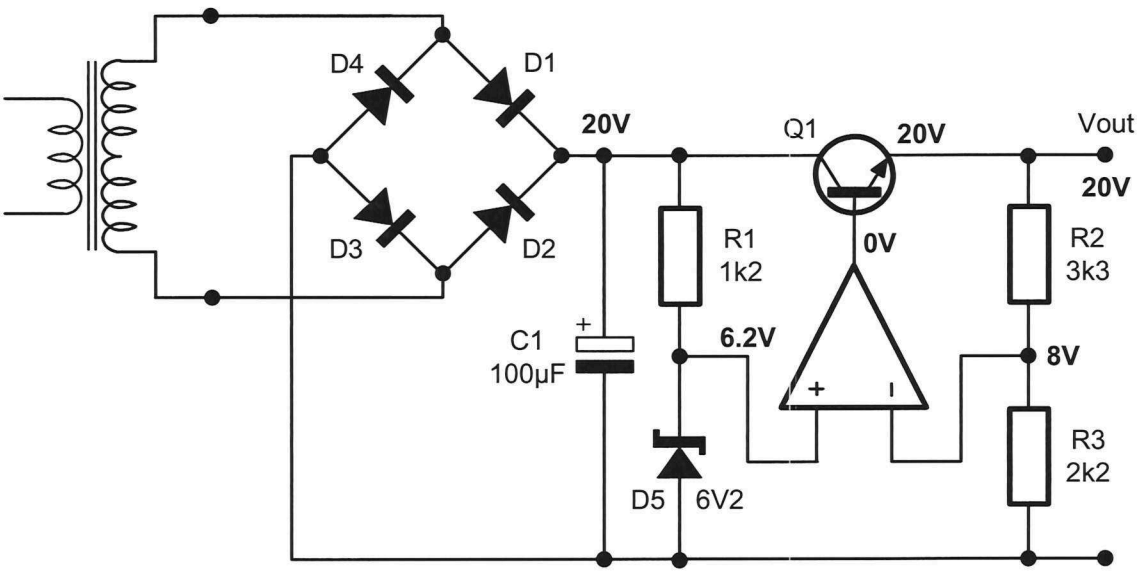

Figure 18

For a heavily loaded circuit , both the unregulated power supply's voltage and the output voltage would be lower or much lower than 20V (because the load is directly connected across the unregulated power supply's output voltage and, being unregulated, it would drop for heavy loads).

Key symptoms of this fault include:

- *Vout* goes up to the unregulated power supply's output voltage
- *Q1's* collector-emitter voltage is about 0V
- *Q1's* base voltage is lower than its emitter voltage
- The op amp's inputs are no-longer the same voltage as each other. (Notice that the voltage divider principle applies to determine the voltage on the op amp's inverting input.)

- *Q1* short-circuit base-emitter

Figure 19 shows what happens around the circuit when *Q1* goes short-circuit between its base and emitter leads. *Q1* turns off (because the base-emitter p-n junction doesn't exist any longer) but, as you can see, the output voltage doesn't change under no-load and lightly loaded conditions provided the load current is below the op amp's maximum output current. However, once the load attempts to draw more than the op amp's maximum output current, the output voltage is no-longer regulated and goes down.

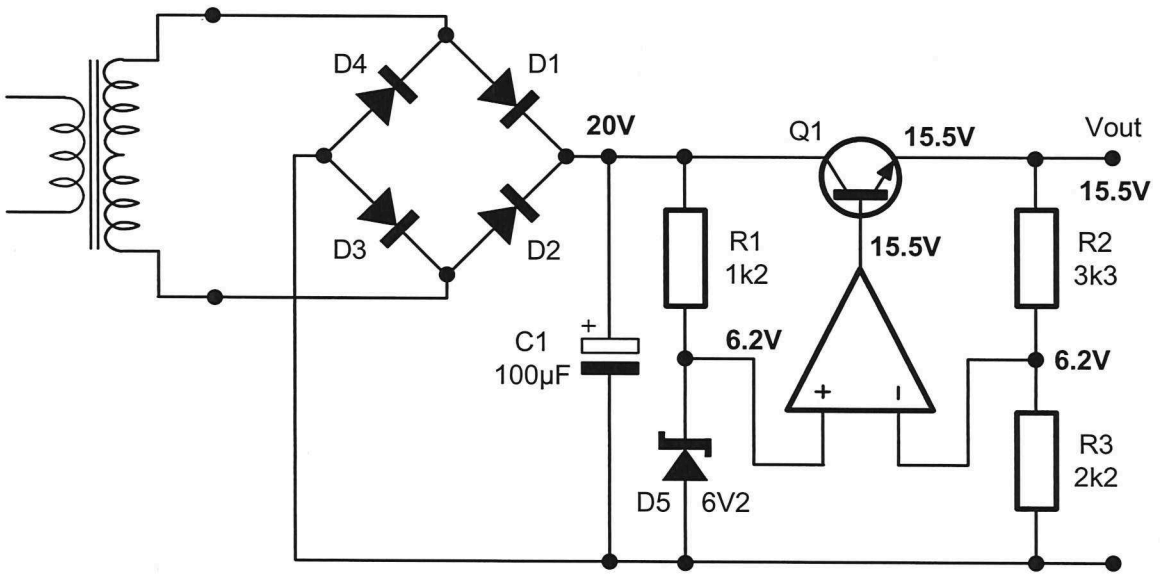

Figure 19

For a heavily loaded circuit, the output voltage would be lower or much lower than the output voltage of the working circuit.

Key symptoms of this fault include:

- *Vout* is unchanged for no-load and light loads but goes down for heavy loads
- *Q1's* base-emitter voltage is 0V
- The op amp's inputs remain the same voltage as each other for light loads. However, for heavy loads, the op amp's inverting input becomes smaller than the non-inverting input and can be calculated using the voltage divider principle.

 Copyright: Not to be reproduced without permission

- *Q1* open-circuit collector

Figure 20 shows what happens around the circuit when the collector of *Q1* goes open-circuit. There is no-longer any current to the load via *Q1's* collector. The only load current is the current that flows via the op amp's output. As with the previous fault, the output voltage doesn't change under no-load and lightly loaded conditions provided the load current is below the op amp's maximum output current. However, once the load attempts to draw more than the op amp's maximum output current, the output voltage is no-longer regulated and goes down.

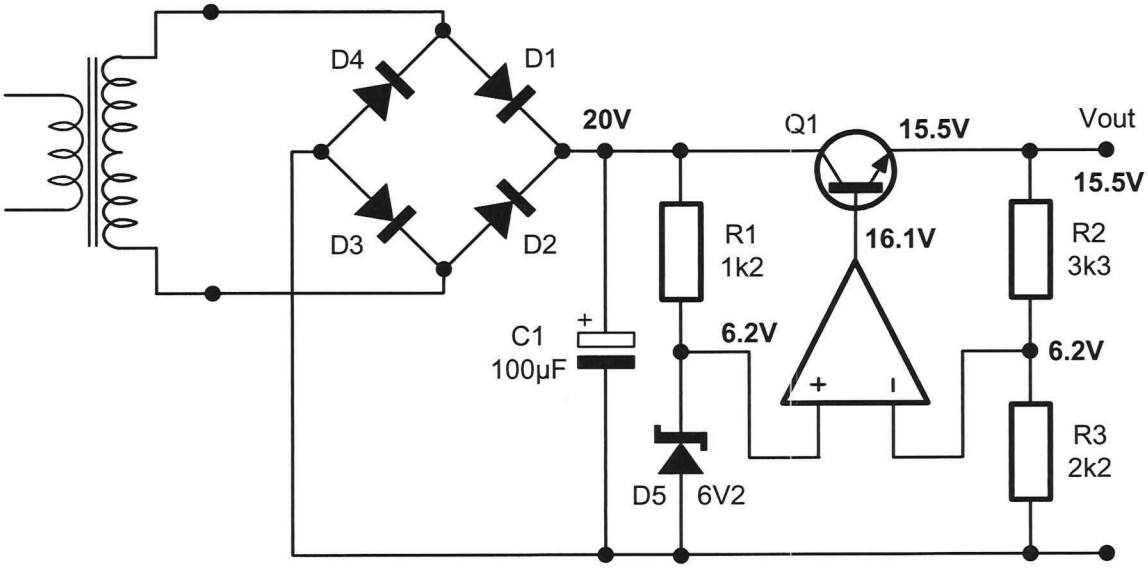

Figure 20

For a heavily loaded circuit , the output voltage would be lower or much lower than the working circuit.

Key symptoms of this fault include:

- *Vout* is unchanged for no-load and light loads but goes down for heavy loads
- *Q1's* base-emitter voltage is still about 0.6V (though it could be a little over 0.7V)
- The op amp's inputs remain the same voltage as each other for light loads. However, for heavy loads, the voltage on op amp's inverting input is smaller than the voltage on the non-inverting input and can be calculated using the voltage divider principle.

- *Q1* open-circuit base (or open-circuit emitter, it's effectively the same thing)

Figure 21 shows what happens around the circuit when either the base or the emitter of *Q1* goes open-circuit. The output voltage is 0V because *Q1* is turned off and so there would be no path from the regulator's input to its output.

Naturally, the voltage on the op amp's inverting input is 0V too because *R2* and *R3* are a voltage divider. As the op amp is now operated in open-loop mode, the low voltage on its inverting input causes its output voltage to rise to maximum (which would be about 1V below the unregulated power supply's output voltage).

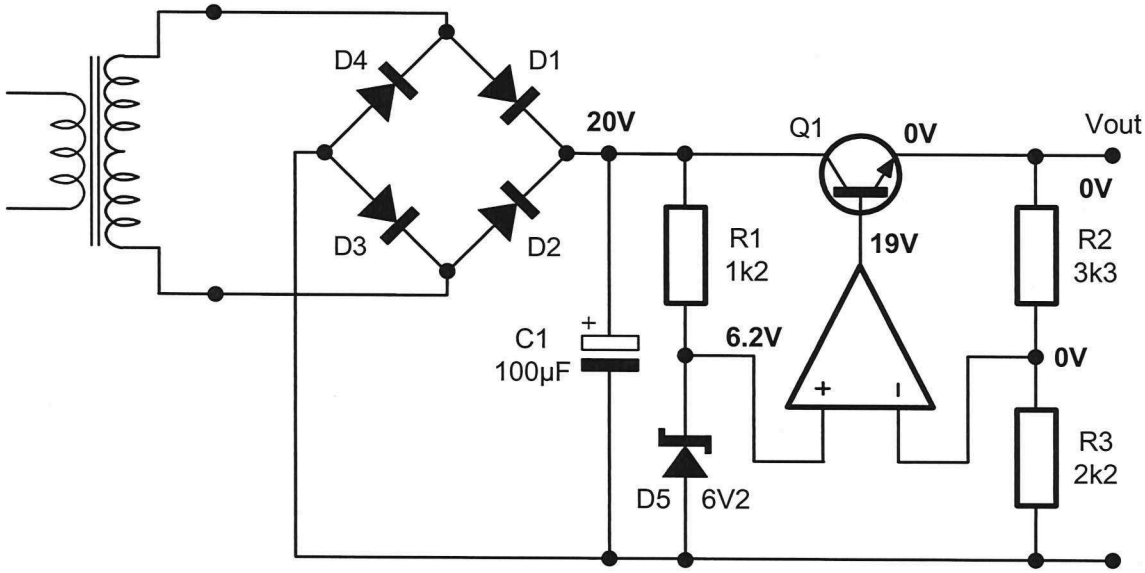

Figure 21

Key symptoms of this fault include:

- *Vout* goes down to 0V
- *Q1's* base-emitter voltage is much bigger than 0.6V
- The op amp's inputs are no-longer the same voltage as each other with the inverting input's voltage equal to 0V.

 Copyright: Not to be reproduced without permission

- Zener diode short-circuit

Figure 22 shows what happens around the circuit when the zener diode goes short-circuit. The output voltage drops to 0V.

To understand why the voltages shown are obtained, you first need to appreciate that, the op amp's loop is still closed (that is, negative feedback is still operating). This means that the voltage on the op amp's two inputs must be the same as each other. With the non-inverting input shorted to ground, it sits on 0V and so this means that the op amp's inverting input must be 0V. The only way the op amp can make that happen is to force the circuit's output voltage to 0V too.

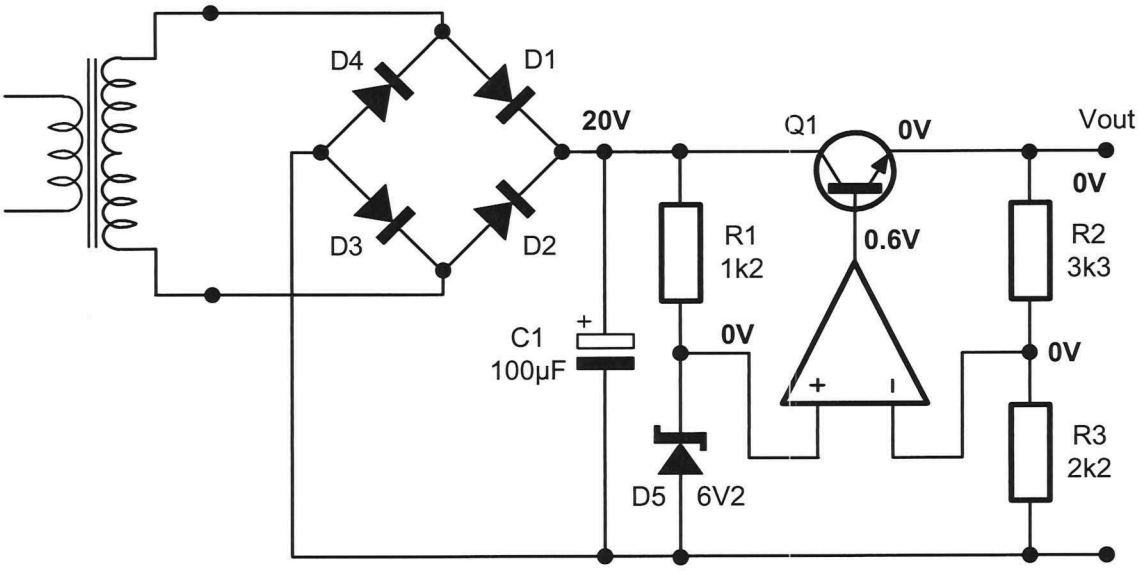

Figure 22

Key symptoms of this fault include:

- *Vout* goes down to 0V
- *Q1's* base-emitter voltage is still about 0.6V
- The reference voltage is 0V
- The op amp's inputs remain the same voltage as each other.

- Zener diode open-circuit

Figure 23 shows what happens around the circuit when the zener diode goes open-circuit. The output voltage rises to maximum which is shown as 18.4V in this case.

To understand why the voltages shown are obtained, you first need to appreciate that, with the zener diode open-circuit, the potential difference on the op amp's non-inverting input would be identical to the unregulated power supply's output voltage (so, 20V in this case). This is because the current into an op amp's input is extremely small (in the order of nanoamps) and so the potential difference across *R1* would approach 0V. This would pull the op amp's output voltage up to try to make its inverting input voltage the same. But, the maximum output voltage of op amps is typically about 10% lower than its supply voltage. As the op amp's positive rail is connected to the unregulated power supply's output (so, 20V), it's output voltage would be about 19V. This forward biases the pass transistor and so the output voltage is 18.4V.

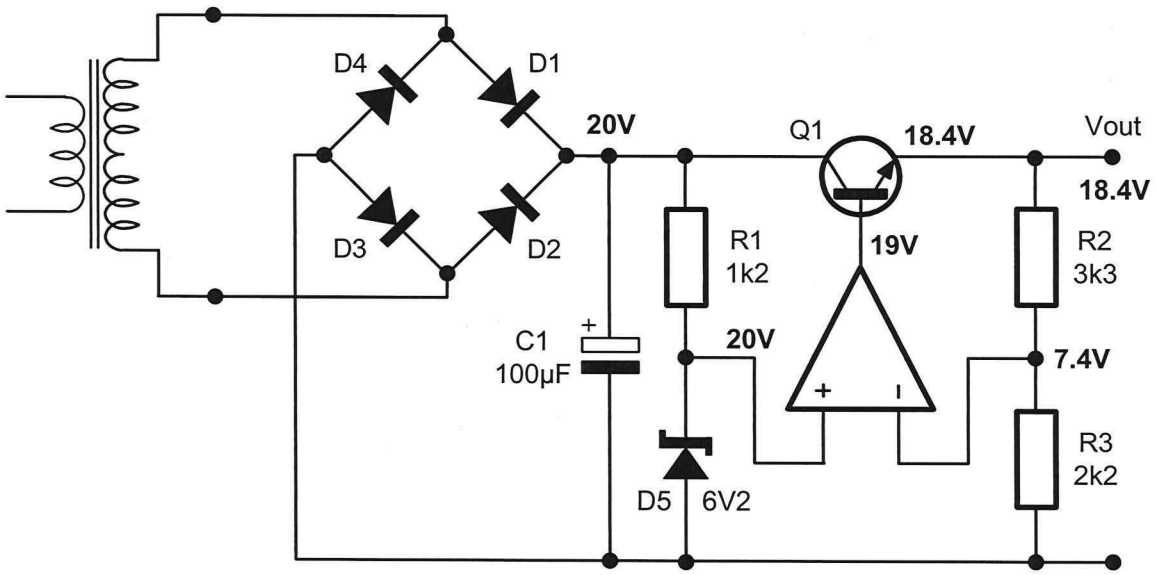

Figure 23

Key symptoms of this fault include:

- *Vout* goes up to maximum
- *Q1's* base-emitter voltage is still about 0.6V
- The reference voltage is the same as the unregulated power supply's output voltage
- The op amp's inputs are no-longer the same voltage as each other with the inverting input's voltage able to be calculated using the voltage divider principle.

 Copyright: Not to be reproduced without permission

- Op amp faulty

Output sits at, or near, +*Vcc*
As you know, if an integrated circuit fails, we can't get inside to see what the problem is and fix it. So, there's not much point in speculating about which one of the dozens of component inside an op amp has failed to cause the device itself to fail. We can only really consider the effect of the fault on the op amp's output.

In this author's experience the majority of faults with single rail op amps show themselves as one of two possibilities. The first is that the output voltage goes up and just sits at a voltage at or near the positive supply rail's voltage. The voltages around the circuit for this fault are shown in Figure 24 below.

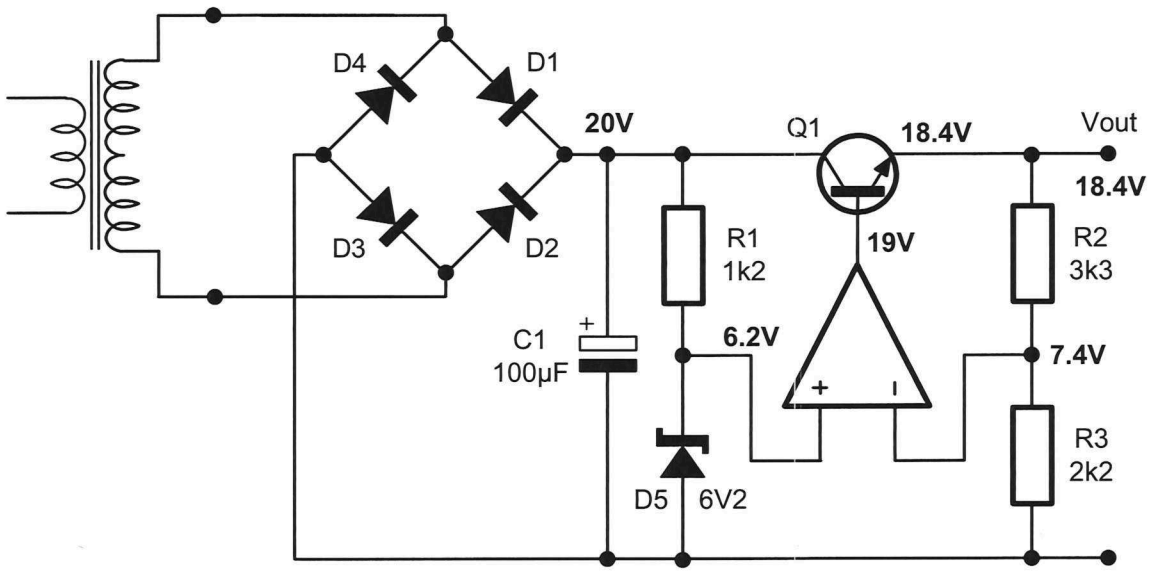

Figure 24

Key symptoms of this fault include:

- *Vout* goes up to maximum and is unregulated
- *Q1's* base-emitter voltage is still about 0.6V
- The op amp's inputs are no-longer the same voltage as each other with the inverting input's voltage able to be calculated using the voltage divider principle.

Output sits at, or near, -*Vcc* (or 0V in this case because its a single rail op amp)
The second way that a single rail op amp's fault tends to show itself at the output is by the output voltage going down to sit at or near 0V. The voltages around the circuit for this fault are shown in Figure 25 below.

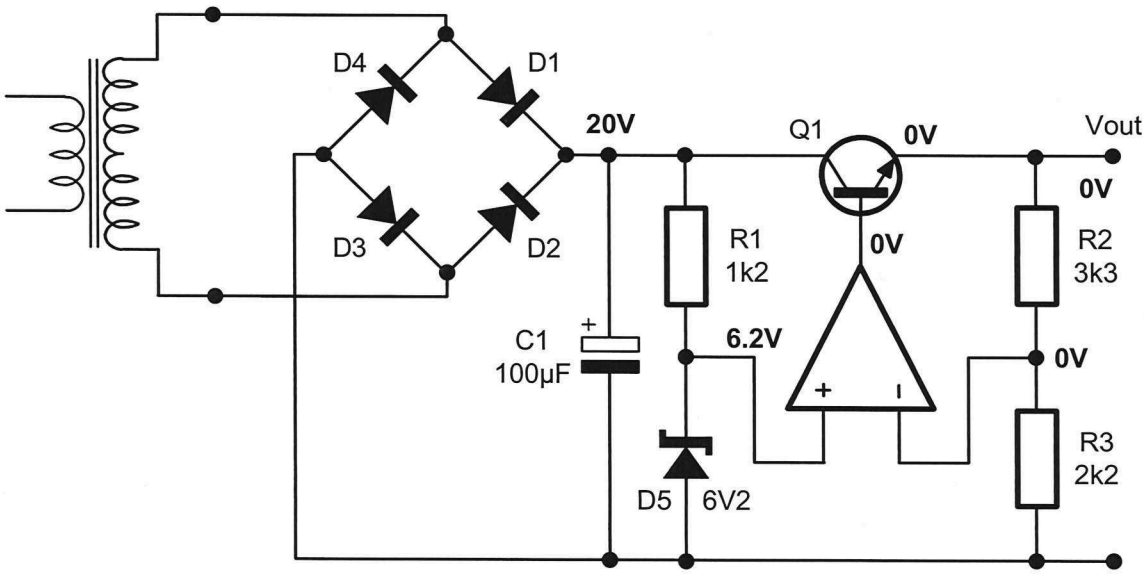

Figure 25

Key symptoms of this fault include:

- *Vout* goes down to 0V
- *Q1's* base-emitter voltage is about 0V
- The op amp's inputs are no-longer the same voltage as each other with the inverting input's voltage equal to 0V.

 Copyright: Not to be reproduced without permission

- *R2* a little high (say, up by about 25% or so in this example)

Figure 26 shows what happens around the circuit when *R2* goes a little high (say, by 25%). This fault can easily be understood by simply recalculating the potential differences around the circuit using 4k for *R2* instead of 3k3.

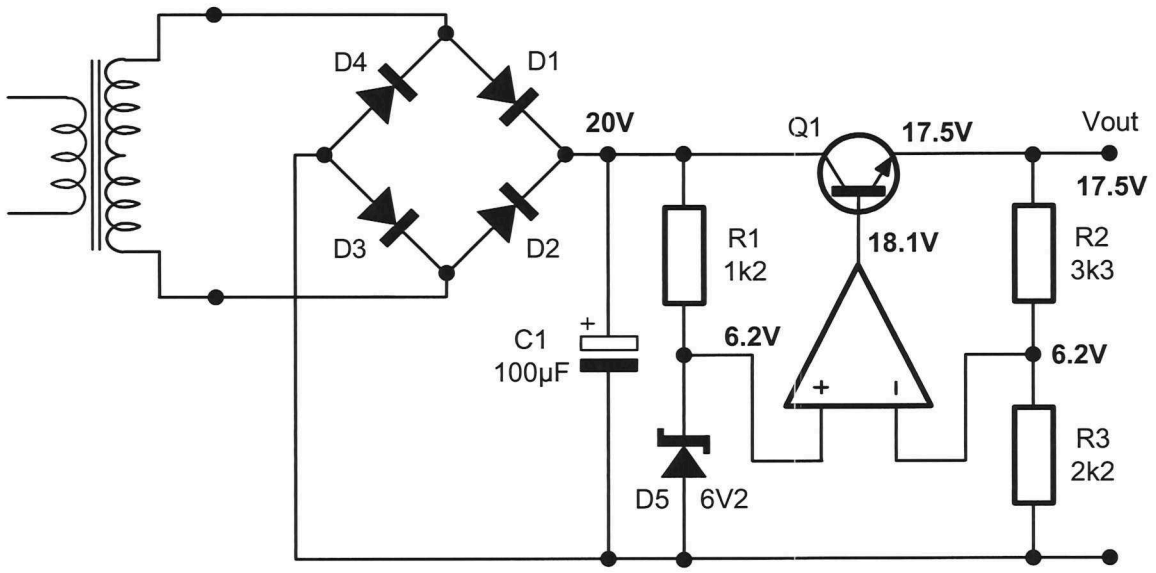

Figure 26

Key symptoms of this fault include:

- *Vout* goes up but is still regulated
- *Q1's* base-emitter voltage is still about 0.6V
- The op amp's inputs remain the same voltage as each other.

- *R2* high (say, by about 30% or more in this example)

Figure 27 shows what happens around the circuit when *R2* goes very high (so, high by more than about 30%). This fault can easily be understood by simply recalculating the circuit's output voltage using a potential differences around the circuit using 6k for *R2* instead of 3k3. According to the gain equation, the output voltage would want to rise to 23V but that's obviously not possible because its bigger than the unregulated power supply's output voltage. So, the output voltage goes up to a value that is 0.6V below the biggest voltage that the op amp is capable of outputting (given its power supply voltage).

The circuit conditions of this fault is very similar to the op amp fault that causes its output voltage to go up to maximum.

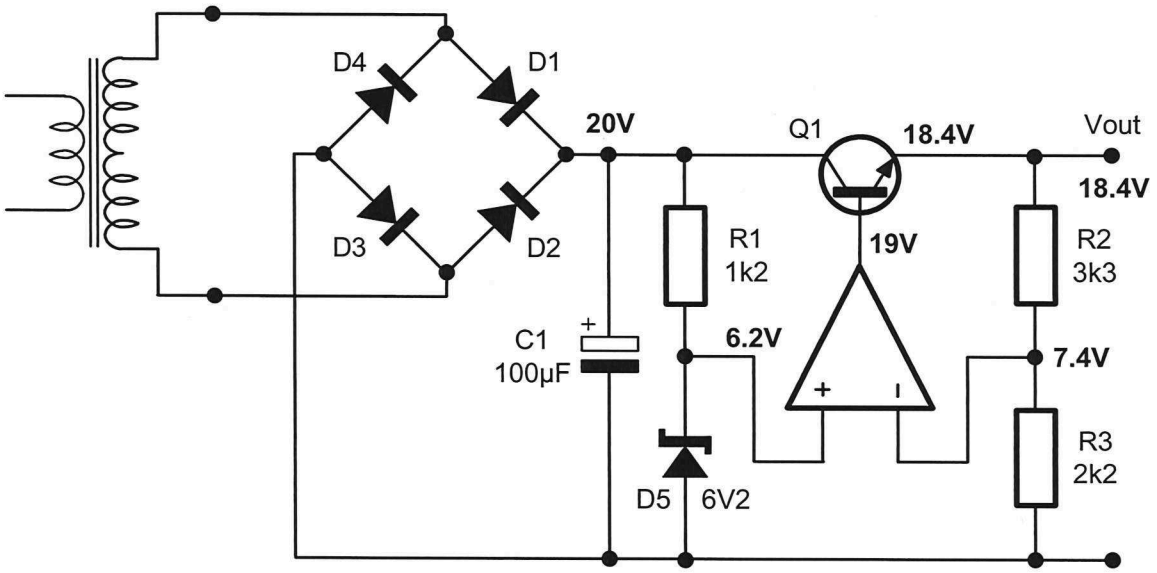

Figure 27

Key symptoms of this fault include:

- *Vout* goes up to maximum and is unregulated
- *Q1's* base-emitter voltage is still about 0.6V
- The op amp's inputs are no-longer the same voltage as each other (with respect to common) with the inverting input's voltage able to be calculated using the voltage divider principle.

 Copyright: Not to be reproduced without permission

- *R2* open-circuit

Figure 28 shows what happens around the circuit when *R2* goes open-circuit. This fault is almost identical to the previous fault except that the voltage on the op amp's inverting input drops to 0V.

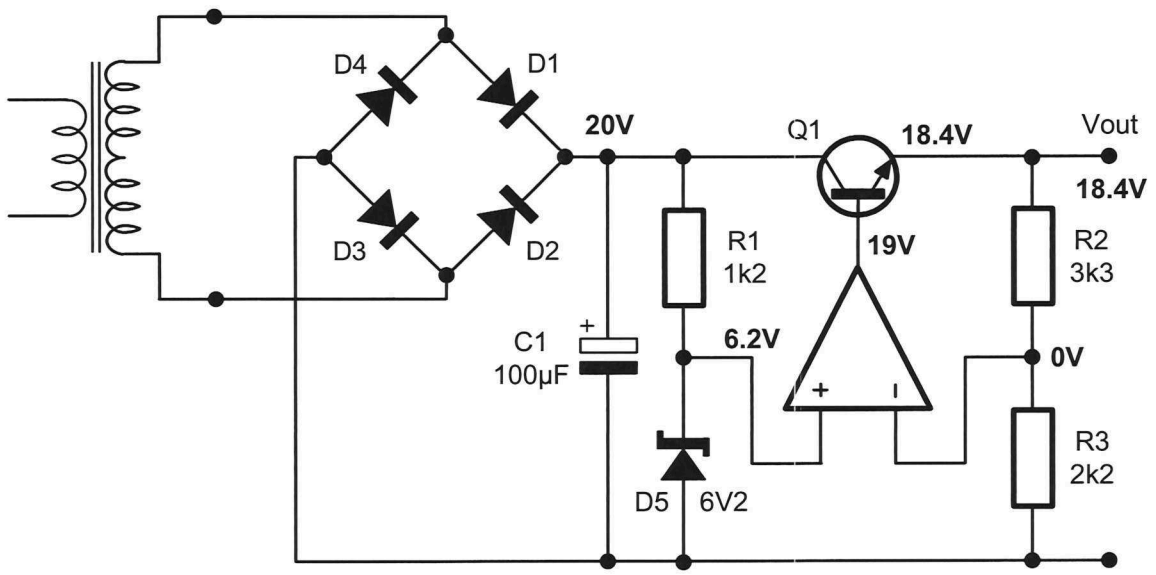

Figure 28

Key symptoms of this fault include:

- *Vout* goes up to maximum and is unregulated
- *Q1's* base-emitter voltage is still about 0.6V
- The op amp's inputs are no-longer the same voltage as each other with the inverting input's voltage equal to 0V.

- *R3* high (say, it doubles)

Figure 29 shows what happens around the circuit when *R3* goes a little high (say, it doubles). This fault can easily be understood by simply recalculating the potential differences around the circuit using 4kΩ for *R3* instead of 2k2.

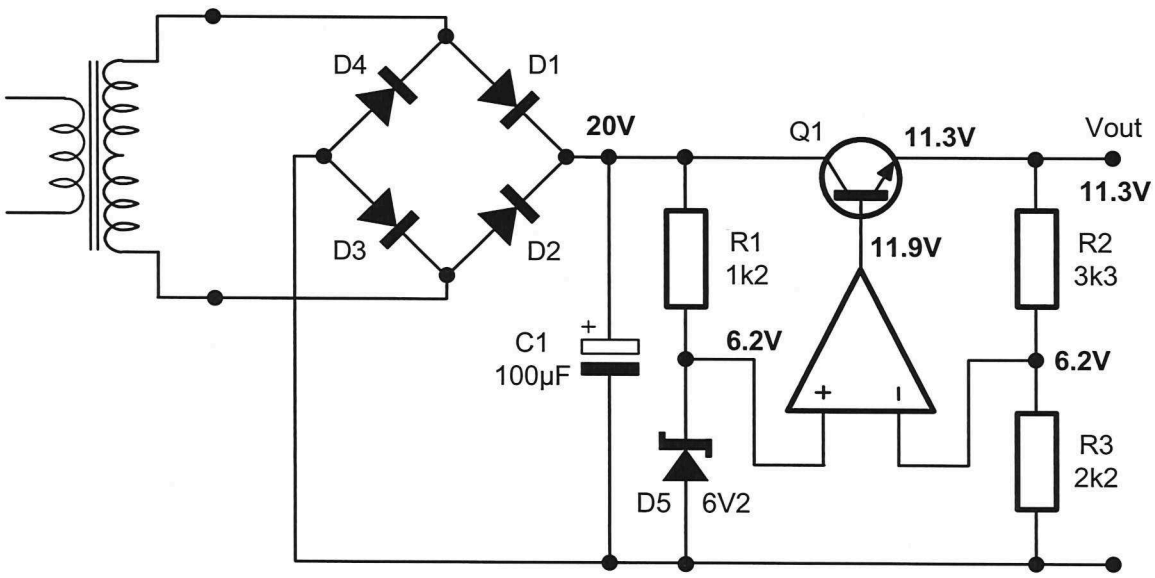

Figure 29

Key symptoms of this fault include:

- *Vout* goes down but is still regulated
- *Q1's* base-emitter voltage is still about 0.6V
- The op amp's inputs remain the same voltage as each other.

 Copyright: Not to be reproduced without permission

- *R3* open-circuit

Figure 30 shows what happens around the circuit when *R3* goes open-circuit. This fault is almost identical to the previous fault except that the output voltage goes down to the reference voltage (6.2V in this example).

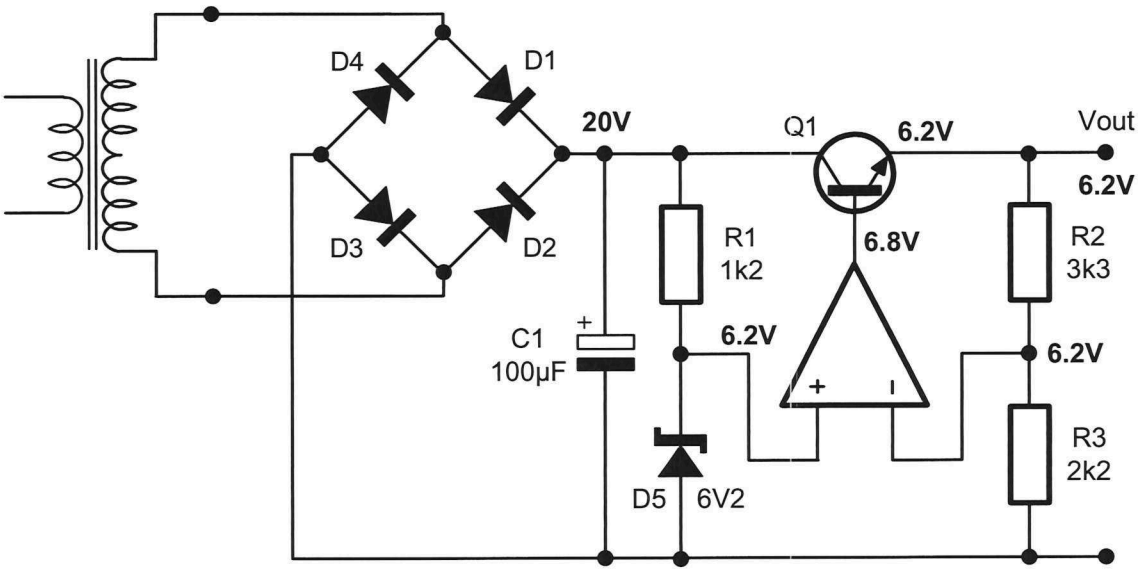

Figure 30

Key symptoms of this fault include:

- *Vout* goes down and is the same as the reference voltage
- *Q1's* base-emitter voltage is still about 0.6V
- The op amp's inputs remain the same voltage as each other.

Skill practice 4

Practise measuring potential differences around the circuit of a series regulator with closed-loop control using op amp error amplification with simulated faults

This exercise is practise for the sorts of skills you may be required to perform in a practical test. Remember, in any practical tests you will be working alone so make sure that you can perform all the steps. It should take you about 1 hour to complete this exercise.

Equipment

- prototyping panel
- 15V AC power supply
- DMM
- unregulated power supply module
- LM358 IC
- BD139 NPN transistor
- 1N4735A
- 1kΩ ¼W resistor
- 2k2Ω ¼W resistor
- 3k3Ω ¼W resistor
- banana leads
- hook-up wire
- wire strippers

Remember:

Follow TAFE NSW WHS guidance at all times!

 Copyright: Not to be reproduced without permission

Work tasks

1 Read your WHS responsibilities at the top of the form below. Then conduct a WHS risk assessment and record your findings in the space provided.

Responsibilities of students under the Model WHS Act: s28

- Take reasonable care for your own health and safety by working safely at all times
- Take reasonable care to ensure that your acts or omissions don't put the health and safety of others at risk
- Follow all TAFE NSW WHS guidance and comply with all reasonable instructions from TAFE NSW staff to assist them in complying with the TAFE NSW WHS requirements
- In addition to the above, you must:
  - use and maintain machinery, tools and all other equipment properly and safely
  - ensure that your work area is free of hazards
  - notify a TAFE NSW staff member of actual or potential hazards
  - wear/use prescribed safety equipment
  - take notice of any safety signs and adhere to their instructions

Risks involved in this activity include:	**Control measures:**
■ Trip hazards (eg students bags) ■ Objects dropped on feet (while equipment is taken to and from workbenches).	■ Move bags and other objects from walkways ■ Plan lifting of equipment
Others: _____	Other: _____
_____	_____
_____	_____

My signature here indicates that I have read and understand my responsibilities under the Model WHS Act s28 (detailed above). I have also conducted a risk assessment before undertaking this activity and have identified measures to control these risks and have implemented them.

Signature: _____ Date: _____

2 Gather the equipment needed for this exercise.

3 Look-up the pinout for the LM358 on the internet and write the IC's pin numbers on Figure 1 below.

Note: This 8-pin op amp IC actually has two op amps inside. So, ensure your pin numbers for the two inputs and the output all relate to the same op amp.

4 Look-up the pinout for the BD139 transistor on the internet.

5 Wire the circuit of Figure 1 on the prototyping panel.

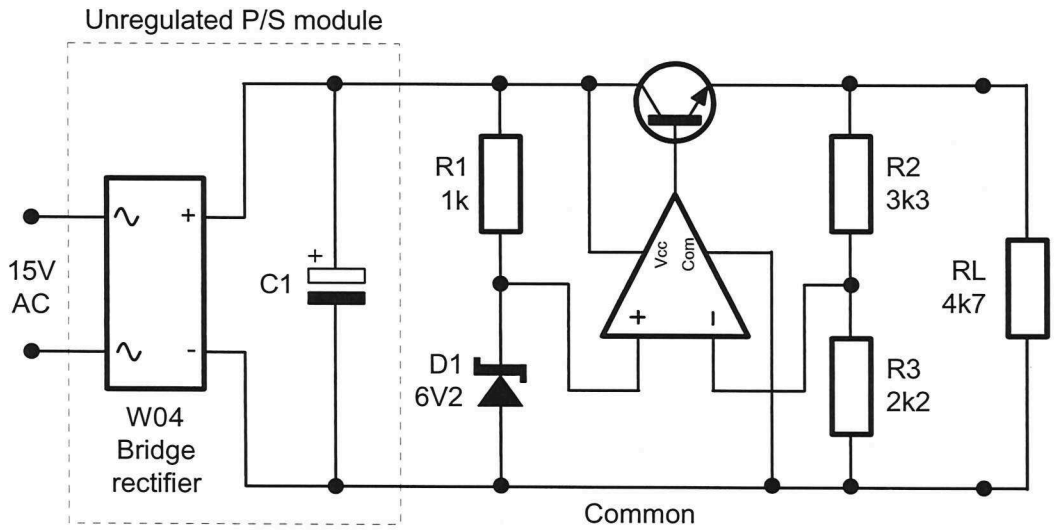

Figure 1

6 Measure the output voltage. Record your measurement in Table 1 below.

7 Calculate and record the output voltage for the circuit.

Table 1

Measured output voltage	Calculated output voltage

 Copyright: Not to be reproduced without permission

Question 1
What are the two causes of the small difference between the measured and calculated output voltages?

The teacher needs to check your work at this point...

8 Measure the voltage (with respect to common) on the IC's pins indicated in Table 2 below. Record your measurements in the appropriate columns.

Table 2

V_{DC} (unregulated)	V_{DC} (regulated)	$V_{non\text{-}inverting}$	$V_{inverting}$	$V_{B(Q1)}$

Question 2
Explain how your measurements prove that negative feedback is operating in this circuit.

The teacher needs to check your work at this point...

9 Simulate a fault by removing *R3*.

10 Repeat Step 8 recording your results in Table 3 below.

Table 3

V_{DC} (unregulated)	Op amp's non-inv. input	Op amp's inv. input	Op amp's output	V_{DC} (regulated)

Question 3
We know the problem is with *R3* because you've removed it. However, why do the voltages on the op amp's non-inverting and inverting inputs indicate that the problem must be one of the faults listed below (assuming the unregulated power supply is ok)?

- *Q1* open-circuit collector
- *R3* open-circuit
- *R3* very high

Question 4
Why do the other circuit voltages indicate that the problem can't be *Q1* open-circuit collector?

The teacher needs to check your work at this point...

 Copyright: Not to be reproduced without permission

11 Reconnect *R3*.

12 Simulate a fault by removing *R2*.

13 Repeat Step 8 recording your results in Table 4 below.

Table 4

V_{DC} (unregulated)	Op amp's non-inv. input	Op amp's inv. input	Op amp's output	V_{DC} (regulated)

Question 5
We know the problem is with *R2* because you've removed it. However, why do the voltages on the op amp's non-inverting and inverting inputs indicate that the problem must be one of the faults listed below (assuming the unregulated power supply is ok)?

- *Q1* open-circuit base-emitter
- *R2* open-circuit
- *R2* very high
- Op amp faulty internally and has caused its output to sit at, or near, Vcc

Question 6
Why do the other circuit voltages indicate that the problem can't be *Q1* open-circuit base-emitter?

Question 7
Why do the other circuit voltages also allow us to rule out the problem with the op amp described in Question 5?

The teacher needs to check your work at this point...

14 Reconnect *R2*.

15 Simulate a fault by removing *D1*.

16 Repeat Step 8 recording your results in Table 5 below.

Table 5

V_{DC} (unregulated)	Op amp's non-inv. input	Op amp's inv. input	Op amp's output	V_{DC} (regulated)

Question 8
Think about the voltages around the circuit, particularly the voltage on the op amp's non-inverting input. Why do these suggest that the problem is likely **not** a problem with *Q1*, *R2*, *R3* and *U1*? **Tip:** Think about the relationship between the reference and output voltages.

Copyright: Not to be reproduced without permission

The teacher needs to check your work at this point...

Review questions

Answer these questions to check your understanding of what you have learnt for this chapter. Doing this will also help to prepare you for the tests.

1 Briefly explain why op amp error amplification provides better load regulation than BJT error amplification.

_____

_____

_____

Questions 2 to 5 refer to the circuit in Figure 1 below

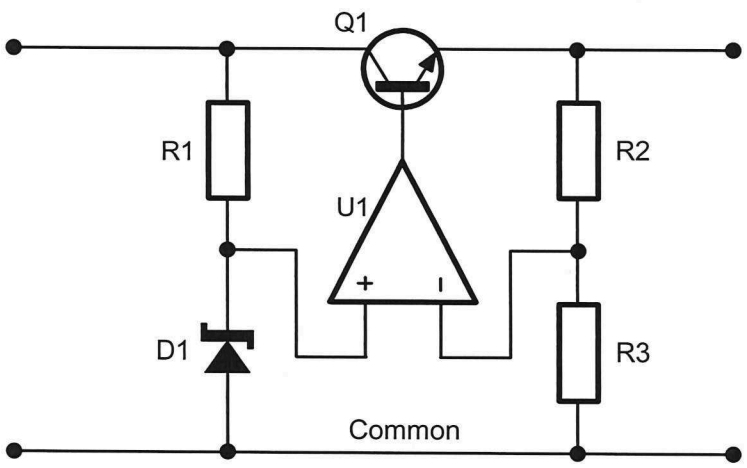

Figure 1

2 Which components implement the reference voltage?

☐ R1 and D1

☐ R2 and R3

3 Which components implement the sampling network?

☐ R1 and D1

☐ R2 and R3

 Copyright: Not to be reproduced without permission

4 Which component or component implements the comparator and error amplifier?

☐ Q1

☐ U1

5 What two devices can be used instead of the zener diode to improve the circuit's line regulation?

_____

_____

Questions 6 to 11 refer to the circuit in Figure 2 below

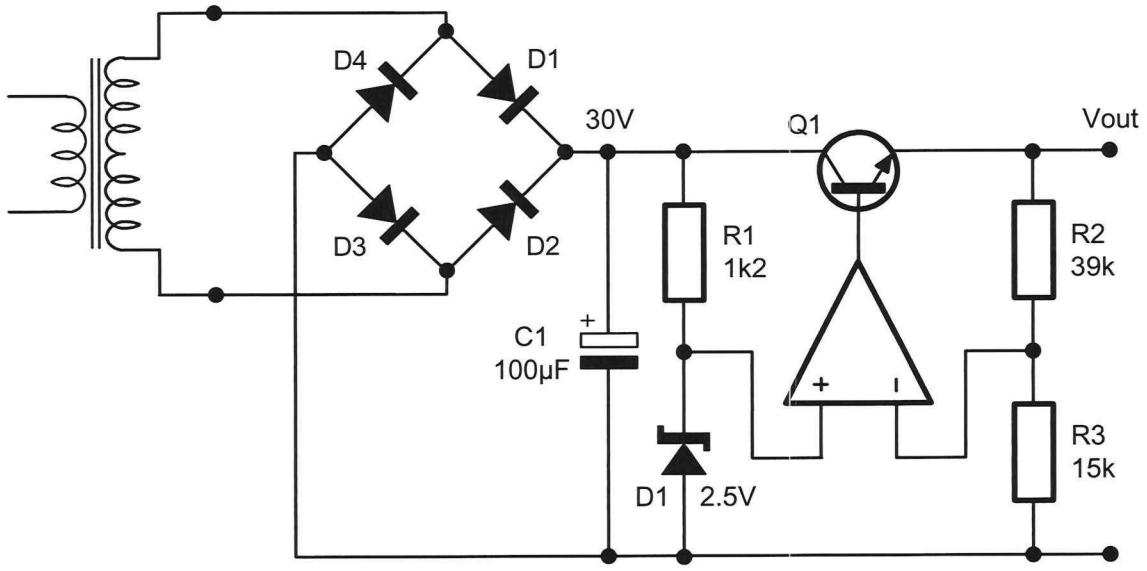

Figure 2

6 What is the voltage on the op amp's non-inverting input ($V_{\oplus}$)?

_____

7 What is the potential difference across *R3* (V_{R3})?

_____

8 Calculate the output voltage (*Vout*).

9 Calculate the voltage on the base of *Q1* ($V_{B(Q1)}$).

10 Calculate the power dissipated by the pass transistor (P_{Q1}) for a load resistance of 67Ω.

11 Complete Table 1 below by stating whether the indicated voltages increase, decrease, float or stay the same for the faults listed.

Table 1

Fault	$V_{non\text{-}inverting\ input}$	$V_{inverting\ input}$	*Vout*	$V_{B(Q1)}$
D1short-circuit				
R2 open-circuit				
R1 open-circuit				
D1 open-circuit				

 Copyright: Not to be reproduced without permission

Questions 12 and 13 refer to the circuit in Figure 3 below

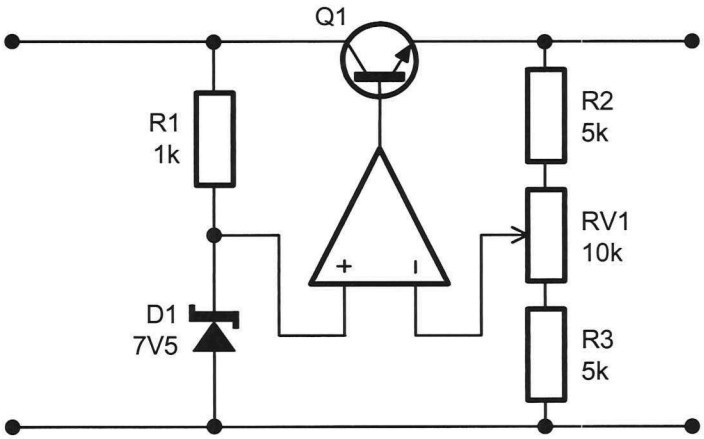

Figure 3

12 Calculate the circuits minimum output voltage.

13 Calculate the circuits maximum output voltage.

Questions 14 and 15 refer to the circuit in Figure 4 below

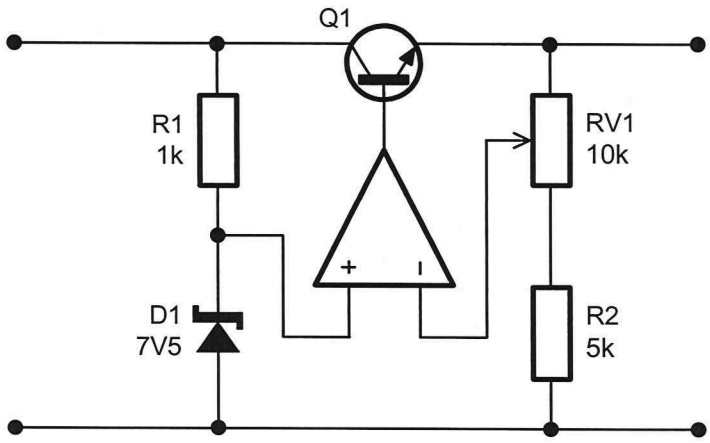

Figure 4

14 What's the circuits minimum output voltage?

15 Calculate the circuits maximum output voltage.

Copyright: Not to be reproduced without permission

Student notes

Section 5 Protection circuits

Purpose To develop your ability to trouble-shoot series regulator circuits that include over-voltage protection and current limiting.

Objectives At the end of this section you should be able to:

- Explain the purpose of crowbar protection and current limiting
- Recognise the circuit of a series regulator with crowbar protection and/or current limiting
- Describe the function of every component in a series regulator with crowbar protection and/or current limiting
- Specify the output voltage that activates an over-voltage protection circuit given component values
- Calculate the load current that activates a current limiting circuit given component values
- Describe the difference between constant current limiting and foldback current limiting and the advantage of the latter
- Measure voltages around the circuit of a series regulator with BJT error amplification that includes constant current limiting

 Copyright: Not to be reproduced without permission

Introduction

When describing the operaton of unregulated and regulated power supplies, it's normal to show the load as a simple resistor. But remember that this is a simplification and the loads of power supplies are actually whole circuits consisting of transistors, integrated circuits and so on. This matters because, when power supplies fail, they can cause damage to one or more components in the load. Conversely, when loads fail, they can damage to one or more components in the regulator circuit, particularly the pass the transistor.

This chapter introduces you to two protection circuits to give you a sense of how they integrate into the power supply. This will help you when you trouble-shoot faulty power supplies.

Crowbar protection

As already mentioned above, a power supply's load will actually be a circuit, one that most likely consists of at least one integrated circuit (IC). Importantly ICs have power supply requirements that cannot be exceeded. For example, digital ICs like the 74 series of TTL logic gates operate from a *Vcc* of 5V. While the *Vcc* is allowed to be a little bigger than this, it's not allowed to exceed 5.25V. Voltages a little above this figure risk shortening the IC's life and possibly damaging them. Voltages substantially above this figure will almost certainly damage them.

Importantly, all linear regulated power supplies have an unregulated voltage that is bigger than the regulated output voltage. For example, if the power supply's regulated output voltage is 5V, its unregulated voltage will be at least 7V, and possibly bigger. This is relevant because some faults in regulator circuits cause the output voltage to go up to the unregulated DC voltage, a condition called an "over-voltage". Following on from the paragraph above then, an over-voltage on the output of a regulated power supply can create the very real risk of damaging one or more of the ICs in the load, and other sensitive components too.

To reduce the risk of damage to the load due to an over-voltage on the regulated power supply's output, some power supplies include a circuit that shuts down the power supply to protect the load when it happens. A simple but effective example is *crowbar protection*.

Crowbar protection employs a *thyristor* called the *Silicon Controlled Rectifier* (SCR) and so this device needs a little explaining first. The schematic symbol of an SCR is shown in Figure 1 below and, as you can see, it's a three terminal device.

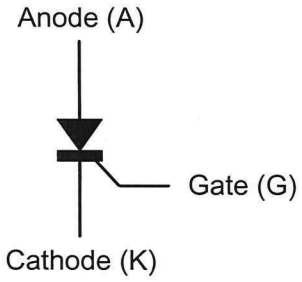

Figure 1 *The schematic symbol for a silicon controlled rectifier*

As the schematic symbol implies, the SCR operates in a similar manner to a normal rectifier diode. That is, it has two states of operation (on and off) and current flows through the device in one direction only (anode to cathode).

The difference between the operation of the SCR and diode though is in how they are made to conduct and what happens when they do.

Recall that regular silicon diodes conduct automatically once their anode is made positive with respect to the cathode by 0.6V. But for SCRs, this is only one of two requirements that must be satisfied for them to conduct. The other requirement is a pulse of current on the third terminal, the gate. Once turned on, the SCR latches (that is, stays on) until its current drops below the minimum level required for operation.

The potential difference across the SCR is twice that of a regular silicon diode, so about 1.2V. That said, like diodes on, SCRs effectively act like a short-circuit between the anode and cathode terminals in that it offers very little resistance to the flow of current.

(**Note:** There's more to the operation of SCRs but this description is sufficient for our purposes here. You'll find plenty of websites that explain the operation of SCRs and the other thyristors if you want to know more.)

 Copyright: Not to be reproduced without permission

The crowbar protection circuit is shown in Figure 2 below with the unregulated power supply and the regulator circuit simply represented by blocks. The combination of *D1* and *R1* "sense" the output voltage while *T1* and the fuse do the work of shutting down the power supply when the over-voltage is detected. The zener diode's (*D1's*) rated avalanche voltage must be bigger than the regulator's output voltage but smaller than the unregulated DC voltage.

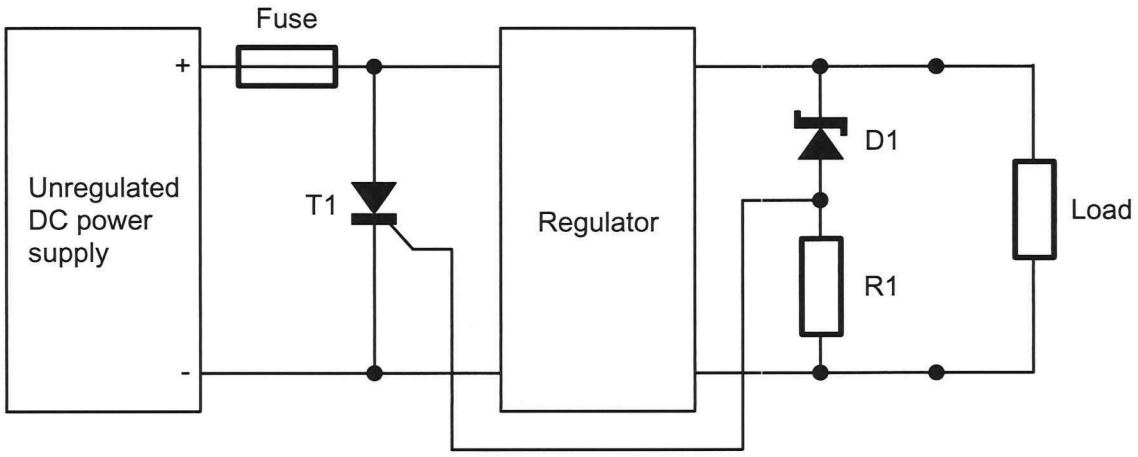

Figure 2 *Crowbar protection to protect the load from over-voltages at the output of the regulator*

It's easiest to explain the circuit's operation using an example with values. Figure 3 below shows the circuit of a 5V regulator with a 10V DC unregulated input and crowbar protection that uses a 7.5V zener diode.

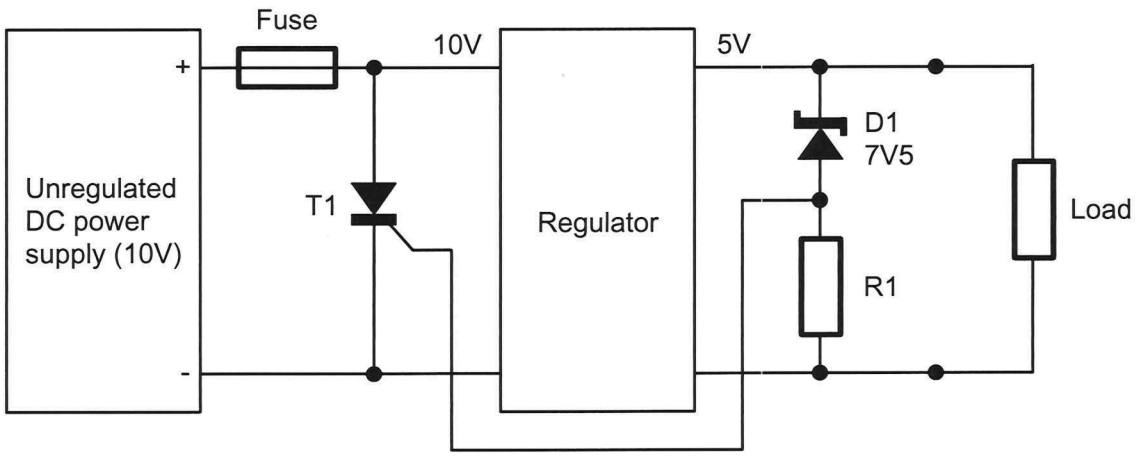

Figure 3

When the regulator is operating normally, the output voltage is insufficient to turn the zener diode on. That being the case, it is effectively an open-circuit and so no current flows through it and the resistor (*R1*) making the potential difference across *R1* 0V. This means that there is also 0V on the SCR's gate input and so the SCR is also off and has no effect on the circuit. These conditions around the circuit are shown in Figure 4 below.

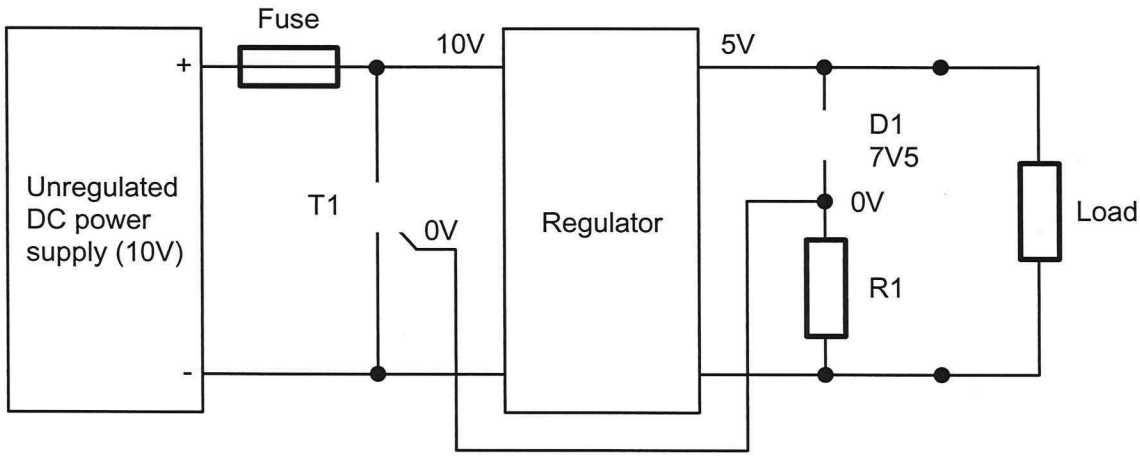

Figure 4 *When the regulator is operating normally, the crowbar protection has no effect on the rest of the power supply*

Should the regulator fail and the output voltage go above 7.5V, the zener diode turns on and current flows through it. This current will divide at the junction with *R1* with some of it flowing into the SCR's gate, "firing" it and latching it on. These conditions around the circuit exist only very briefly and are shown in Figure 5 below.

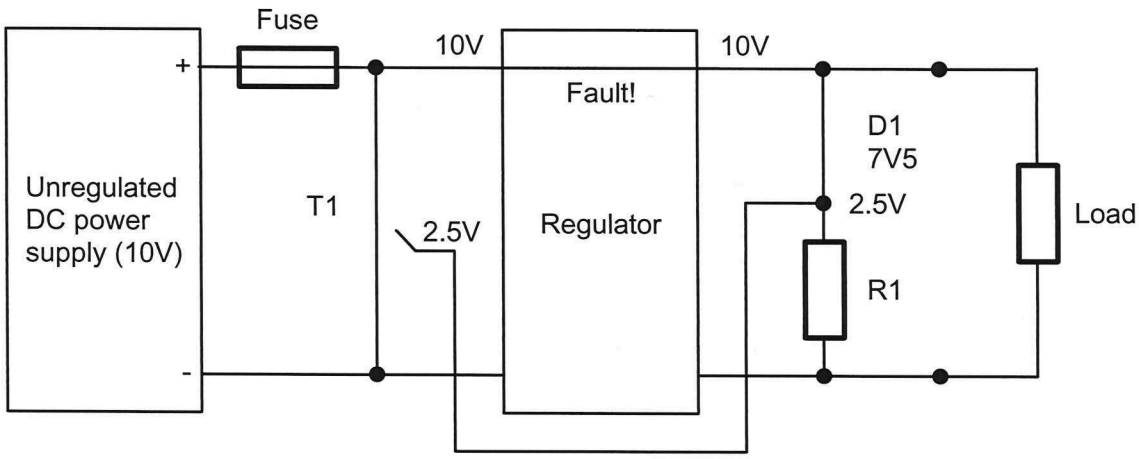

Figure 5 *When the output voltage exceeds the zener diode's avalanche voltage, the crowbar protection circuit engages and the SCR is turned on*

 Copyright: Not to be reproduced without permission

The SCR is latched on for only a very short time because, as Figure 6 shows, it short-circuits the output of the unregulated power supply. This causes sufficient current to flow through the fuse to blow it and disconnect the unregulated power supply's output from the rest of the circuit. In which case, the output voltage drops to zero preventing components in the load from being damaged.

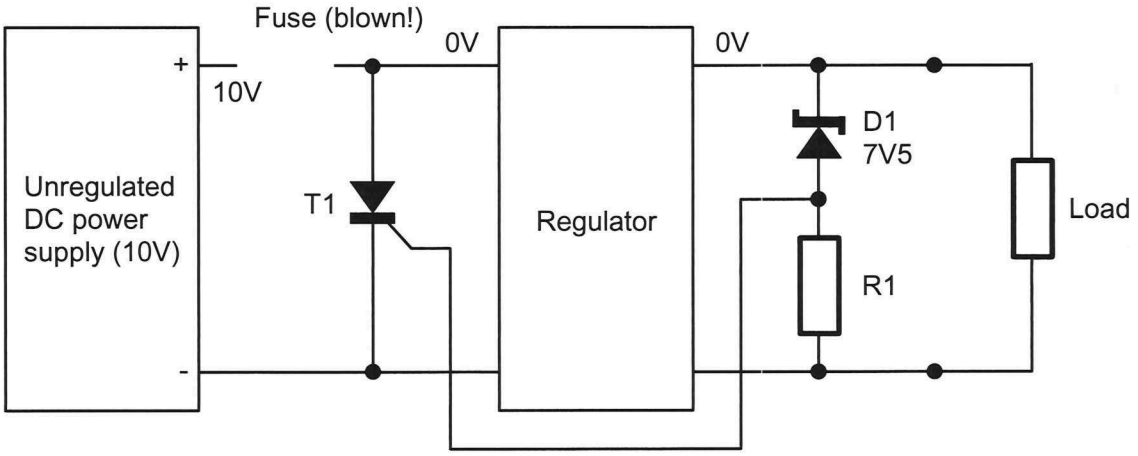

Figure 6 *When the SCR fires, it short-circuit's the unregulated power supply's output, blowing the fuse and disconnecting the unregulated supply from the rest of the circuit*

Figure 7 below shows crowbar protection connected to a series regulator circuit with BJT error amplification.

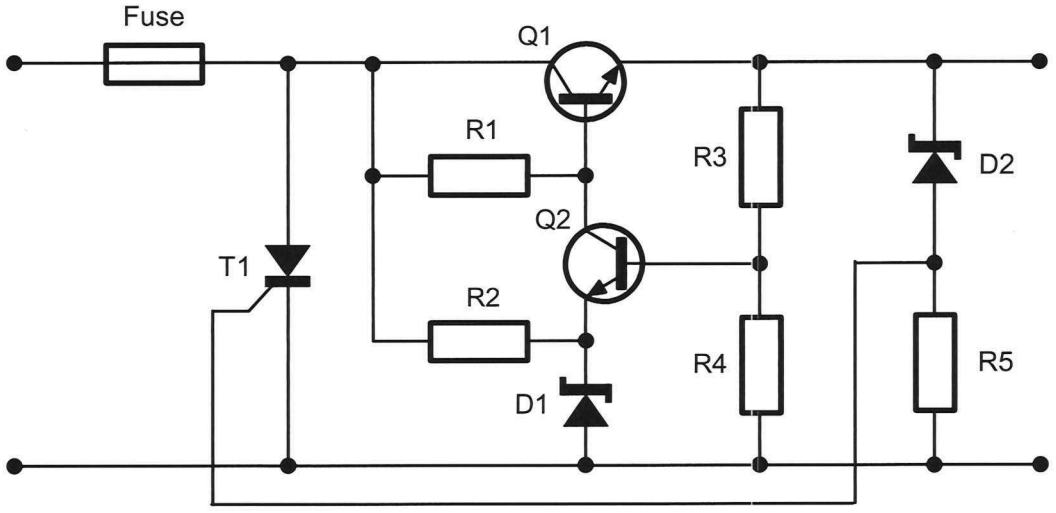

Figure 7 *A series regulator circuit with BJT error amplification crowbar protection*

And Figure 8 below shows crowbar protection connected to a series regulator circuit with op amp error amplification.

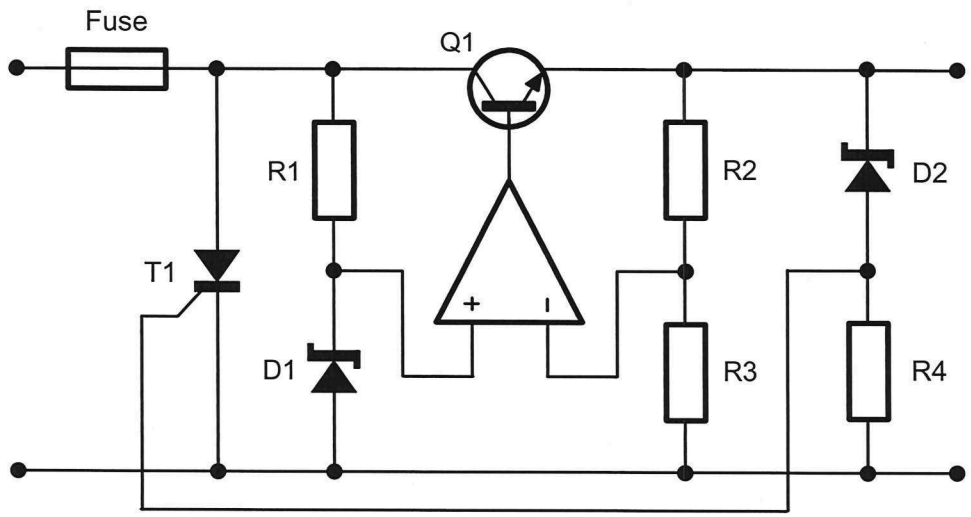

Figure 8 *A series regulator circuit with op amp error amplification crowbar protection*

Fault-finding series regulator circuits with crowbar protection

To consider the effects on the whole circuit when components in the crowbar protection circuit fail, recall that components mostly fail in particular ways. For the components in crowbar protection:

- The resistor can go high or open-circuit
- The over-voltage sensing zener diode can go short-circuit or open-circuit
- The SCR can go short-circuit or open-circuit (like diodes can)

Interestingly, these six likely faults would have only one of two effects on the circuit:

- None of the voltages around the circuit change

  This would occur if the zener diode's series resistor (*R4* in Figure 8 above) goes sufficiently high in value or open-circuit. It would also occur if either the over-voltage sensing zener diode (*D2* in Figure 8 above) or the SCR went open-circuit.

  Although none of these four faults would affect the voltages around the circuit, they would disable the crowbar protection circuit and you wouldn't know that it has happened which is obviously problematic. That said, you would notice that crowbar protection is not working if a fault caused the regulator's output voltage to exceed the rated zennering voltage of the over-voltage sensing diode.

 Copyright: Not to be reproduced without permission

- The crowbar protection circuit's fuse blows at switch-on (even though there's no over-voltage)

  This would occur if the over-voltage sensing zener diode (*D2* in Figure 8 above) went short circuit because it would fire SCR even though there's no over-voltage on the regulator's output. The problem would also occur if the SCR went short-circuit because it would look like it is on.

  This is an interesting fault because, with the crowbar protection's fuse blowing the moment the power supply is turned on, the suspicion would be that there's a fault with the regulator circuit. To try locate that fault, it would be necessary to isolate the regulator from its load (to protect the load from the suspected over-voltage) then disable the crowbar protection to stop the fuse from blowing. (This could be done by lifting one of the legs of the over-voltage sensing zener diode or the SCR.)

  With the crowbar protection circuit disabled, the voltage measurements described in Sections 2, 3 and 4 of this workbook would be taken to locate the faulty component. But once these measurements have eliminated there being a problem with the regulator circuit, the fault is narrowed to the crowbar protection circuit. The faulty component would then be identified by removing the zener diode and SCR one at a time and testing for a short-circuit using your DMM's diode test function.

Current limiting

As you know, the current through a series regulator's load is determined by the regulator's output voltage and the load's resistance ($I_{RL} = \frac{V_{RL}}{R_L}$). As you also know, the load current passes through the pass transistor. This can be a problem if the load draws more current than the pass transistor is capable of handling (either because it exceeds the transistor's maximum collector current rating or because the power that it causes the transistor to dissipate exceeds its maximum power rating). This would happen if there is a fault in the load circuit.

To reduce the risk of faults with the load damaging the regulator circuit, some regulated power supplies include a circuit that protects the power supply when it happens. This is called *current limiting* and there are two types:

- Constant (or Linear) current limiting
- Foldback current limiting

Constant current limiting

Figure 9 below shows the circuit of a series regulator with BJT error amplification with constant current limiting.

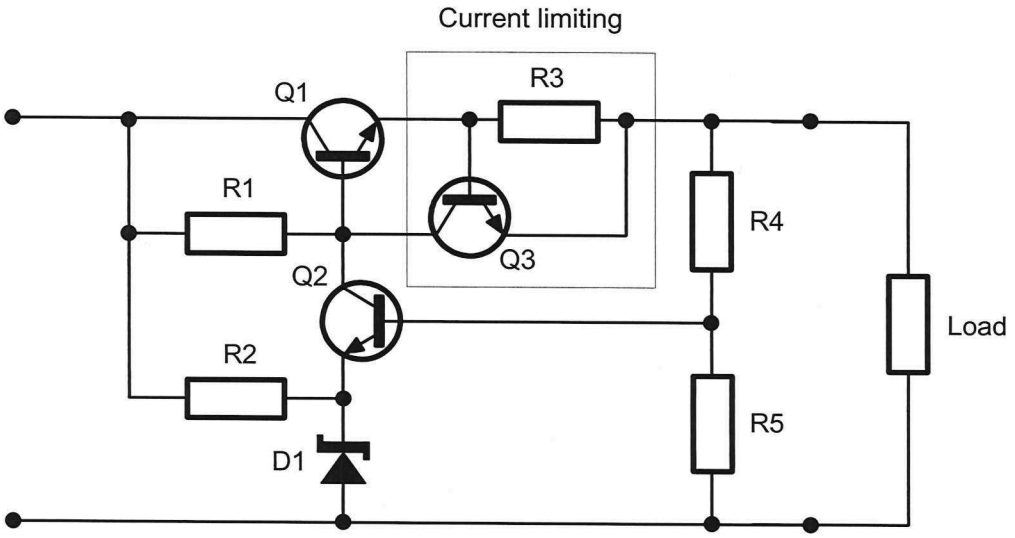

Figure 9 *A series regulator with BJT error amplification and constant current limiting*

This is explained in a little more detail in the coming pages but current limiting is activated when *Q3* is turned on. That being the case, the amount of load current that activates the current limiting circuit (which is the regulator's maximum output current) is set by the base-emitter voltage of *Q3* (assume 0.6V) and the value of the resistor connected across it.

 Copyright: Not to be reproduced without permission

The maximum output current for the circuit in Figure 9 (on the previous page) is calculated using the equation:

$$I_{CL} = \frac{0.6V}{R3}$$

Once the current reaches this level, the voltage across *R3* is big enough to turn *Q3* on.

Figure 10 below shows the circuit of a series regulator with op amp error amplification with constant current limiting.

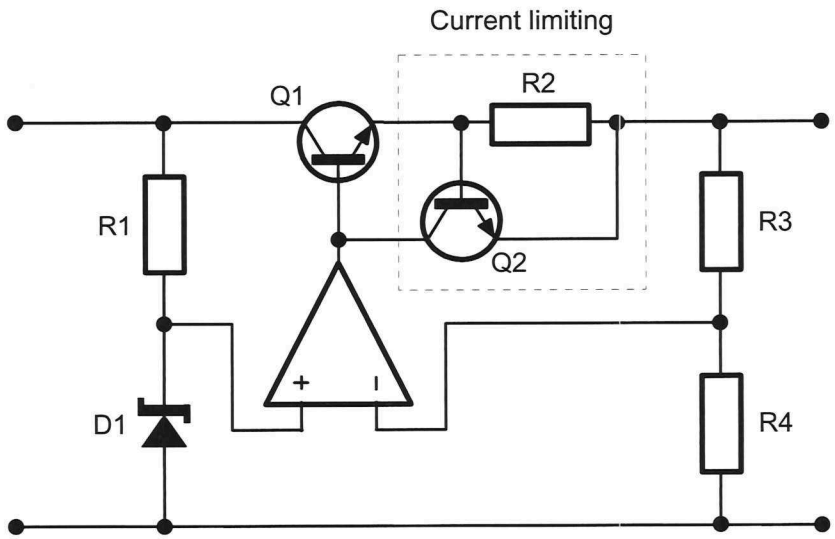

Figure 10 *A series regulator with op amp error amplification and constant current limiting*

The maximum output current for the circuit in Figure 10 is calculated the same way as for the circuit in Figure 9. But, as the circuit in Figure 10 has fewer resistors, the resistor number is different. See:

$$I_{CL} = \frac{0.6V}{R2}$$

It's easiest to explain the circuit's operation and why the current limit level is $\frac{0.6V}{R3}$ by using an example with values. Figure 11 below shows the circuit in Figure 9 with a 10V output and a 1Ω resistor for *R3* (making the current limit level 600mA for this example). It also shows the load current and the voltages around the current limiting circuit for a 100Ω load.

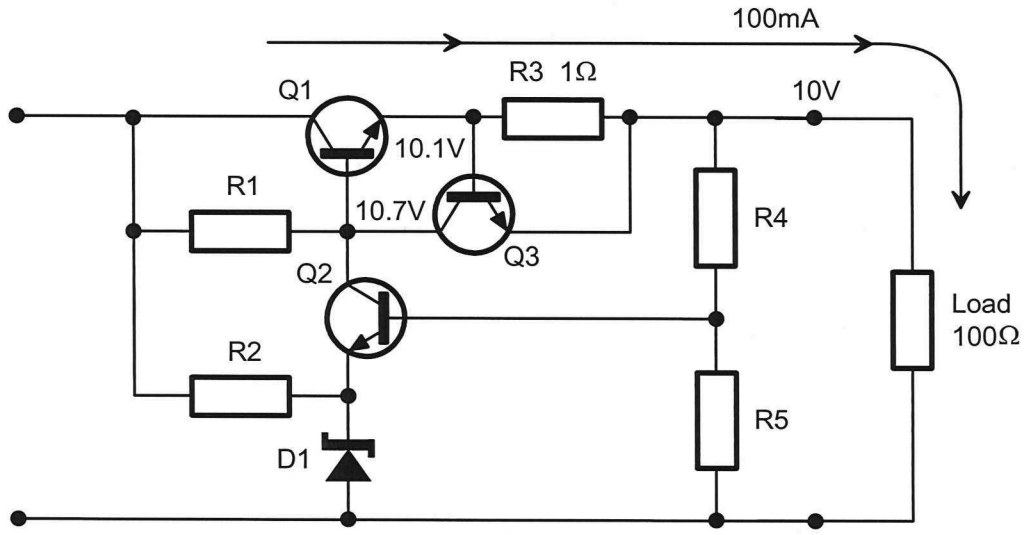

Figure 11 *The circuit in Figure 21 with some values to help explain the operation of the circuit*

As you can see, a 100Ω load connected across 10V causes a 100mA load current to flow. Importantly, the load current passes through *R3* and a quick calculation using Ohm's Law ($1\Omega \times 100mA$) shows that the potential difference across *R3* (V_{R3}) is 0.1V. This means that the current limit transistor's base voltage ($V_{B(Q3)}$) is 10.1V while its emitter voltage ($V_{E(Q3)}$) is the same as the output voltage (10V). These voltages are shown in the circuit above.

[As an aside, the resistor *R3* is said to be "sampling" or "sensing" the load current by developing a potential difference across it that's proportional to the load current. It's interesting then that *R3* is connected in series with the load just like an ammeter would be if it were measuring load current.]

For these conditions, the current limit transistor's base-emitter voltage ($V_{BE(Q3)}$) is 0.1V which is not enough to forward bias the transistor's base-emitter p-n junction and so the transistor is cut-off and no current flows through. In which case, *Q3* looks invisible as shown in Figure 12 on the next page and has no effect on the rest of the circuit other than the small potential difference that develops across *R3* which the error amplifier compensates for anyway (notice that $V_{B(Q1)}$ is now 0.7V bigger than *Vout* and not 0.6V).

 Copyright: Not to be reproduced without permission

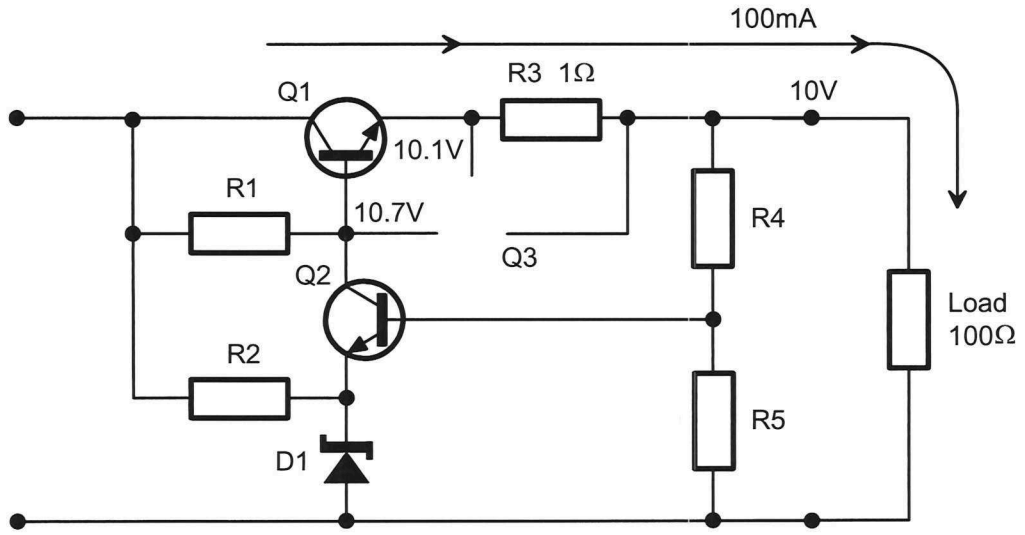

Figure 12 *With Q3 cut-off, it looks invisible to the rest of the regulator*

As the load resistance goes down, the voltages and currents around the circuit change as summarised in Table 1 below (an ideal regulator is assumed). However, while the theoretical load current remains below the current limit setting *Q3* remains invisible.

Table 1

R_L	Vout	I_{RL}	$V_{B(Q3)}$	$V_{C(Q3)}$	$V_{BE(Q3)}$
100Ω	10V	100mA	10.1V	10.7V	0.1V
50Ω	10V	200mA	10.2V	10.8V	0.2V
33.3Ω	10V	300mA	10.3V	10.9V	0.3V
25Ω	10V	400mA	10.4V	11V	0.4V
20Ω	10V	500mA	10.5V	11.1V	0.5V
18.2Ω	10V	550mA	10.55V	11.15V	0.55V

When the load's resistance drops to 16.7Ω, the load current is 600mA ($\frac{10V}{16.7\Omega}$) and Figure 13 below shows the circuit conditions when this happens (again, an ideal regulator is assumed).

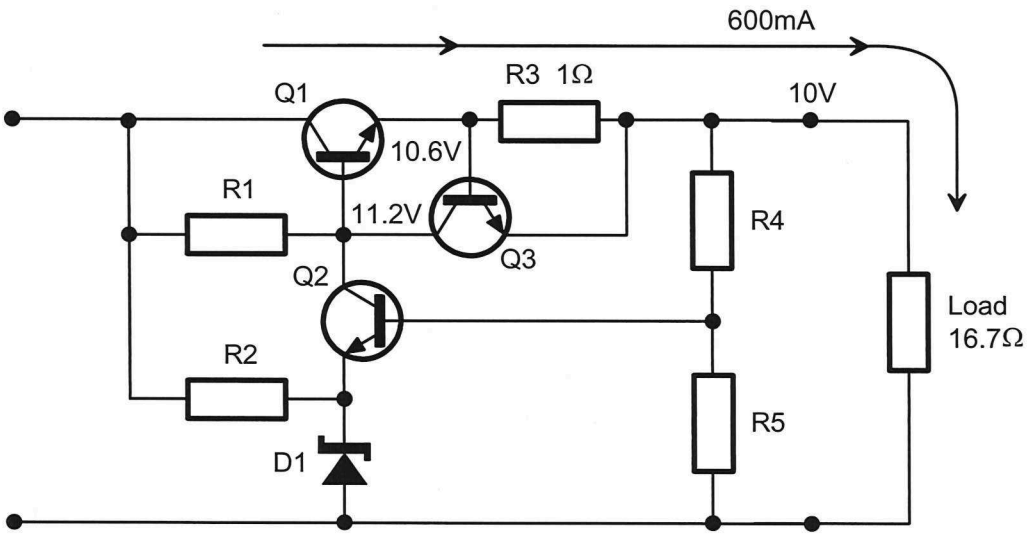

Figure 13 *The conditions around the circuit for a 16.7Ω load*

As the diagram shows, the load current passing through *R3* develops a potential difference across it (V_{R3}) of 0.6V. This means that the current limit transistor's base voltage ($V_{B(Q3)}$) is 10.6V while its emitter voltage ($V_{E(Q3)}$) is still 10V.

For this condition, the current limit transistor's base-emitter voltage ($V_{BE(Q3)}$) is 0.6V which forward biases the current limit transistor and so the current limiting circuit is activated. Once this happens, the current limiting circuit prevents any further increase in load current as the load's resistance reduces further. This is because the current limit transistor acts as though it's a resistor connected across the base-emitter junction of the pass transistors that "steals" the current from the base of the pass transistor preventing it from turning on harder to meet the load's increased current needs. Thus, the load current is largely prevented from getting much bigger (and explains why it's called "constant" current limiting).

Another way to think about this is to recall that once a p-n junction is forward biased, the potential difference across it is relatively fixed at around 0.6V. This fixes the potential difference across *R3* which means the current through it must be fixed too. As this is the same current as the load current, the load current must also be fixed. This can be demonstrated if we redo Table 1 showing what happens around the circuit as the load resistance drops below 16.7Ω. This is shown in Table 2 on the next page.

 Copyright: Not to be reproduced without permission

Table 2

R_L	Vout	I_{RL}	$V_{B(Q3)}$	$V_{C(Q3)}$	$V_{BE(Q3)}$
100Ω	10V	100mA	10.1V	10.7V	0.1V
50Ω	10V	200mA	10.2V	10.8V	0.2V
33.3Ω	10V	300mA	10.3V	10.9V	0.3V
25Ω	10V	400mA	10.4V	11V	0.4V
20Ω	10V	500mA	10.5V	11.1V	0.5V
16.7Ω	**10V**	**600mA**	**10.6V**	**11.2V**	**0.6V**
15Ω	9V	600mA	9.6V	10.2V	0.6V
14Ω	8.4V	600mA	9V	9.6V	0.6V
13Ω	7.8V	600mA	8.4V	9V	0.6V
12Ω	7.2V	600mA	7.8V	8.4V	0.6V
11Ω	6.6V	600mA	7.2V	7.8V	0.6V
10Ω	6V	600mA	6.6V	7.2V	0.6V

If the output current/voltage performance of a series regulator with constant current limiting is graphed it would look like Figure 14 below.

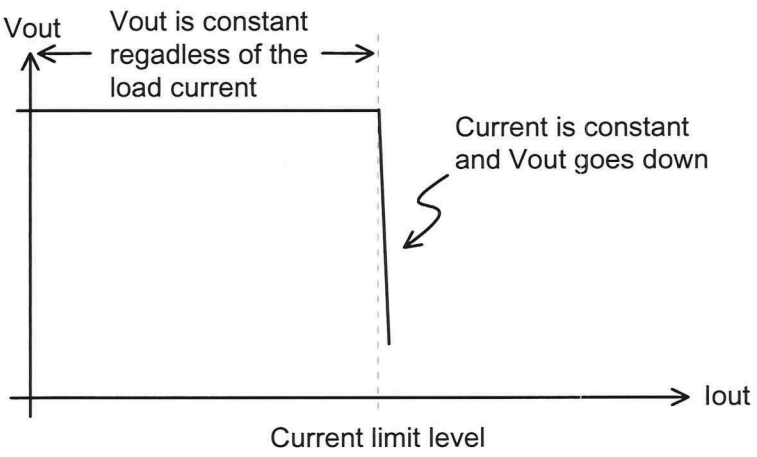

Figure 14 *The graph of output current versus output voltage for a series regulator with constant current limiting*

This graph shows that the name for this current limiting circuit is a little misleading. The load current does continue to increase a little as the load attempts to draw more current so the current limiting effect is not perfectly "constant". Further increases in load current are possible because the current limiting transistor's base emitter voltage can increase beyond 0.6V (it can go up to about 0.8V and even a little higher). However, the change in current is only small and the important thing to appreciate is that the load voltage drops by much more than the load current increases.

Fault-finding series regulator circuits with constant current limiting

The following are the likely faults with the components in the current limiting circuit and their effects.

- *R3* has gone high

  If *R3* goes a little high, the level at which current limiting is activated is lower than it should be and the fault would be noticeable when the load attempts to draw a current higher than the new current level limit. For example, if the load was a printer, it might work fine when you navigate the menus and scan documents but might not be able to execute a print job if the current needs of the motors exceed the new current limit level.

  If *R3* goes very high, the output voltage will drop and behave as though it's not regulated. This would likely affect in the load's operation regardless of the current it's drawing.

- *R3* has gone open-circuit

  When this happens, the regulator's output voltage drops to zero because there is no-longer an electrical connection from the the regulator's input to its output. Also, with no current path from the pass transistor's emitter to common, the emitter voltage will float around 0V and not be 0.6V lower than its base like it should be.

- *Q3* open-circuit base or emitter (it's effectively the same thing)

  This fault would make it impossible for *Q3* to turn on and so the current limiting would be disabled. There would be no noticeable change in voltages around the working regulator. However, a fault in the load would potentially damage the regulator.

 Copyright: Not to be reproduced without permission

- *Q3* open-circuit collector

  This fault would make it impossible for *Q3* to turn on and so current limiting would be disabled allowing excessive load currents to damage the regulator.

  This fault would be tricky to identify because, when the load current reaches the current limit level, the transistor's base-emitter voltage would become forward biased which would give the current limit transistor the appearance of operating correctly. However, under this condition, the load current would be able to exceed the current limit level so this fault can be identified by testing to see whether that can happen.

- *Q3* short-circuit collector-emitter

  This fault would appear as though its a short-circuit base-emitter of the pass transistor because the same voltage would be measured on both its base and emitter leads (with respect to common). That's because *Q3* short-circuit's the pass transistor's base-emitter junction and *R3*.

  However, there's something to look for to avoid being tricked by this fault. If there is a potential difference across the current sensing resistor then the fault is *Q1* short-circuit base-emitter. If there's not then the fault must be *Q3* short-circuit base-emitter.

- *Q3* short-circuit base-emitter

  This fault would disable the current limiting circuit because it would become impossible for *Q3* to turn on. This would be noticeable because the potential difference across *R3* would be 0V even though there is a load current.

Foldback current limiting

As the preceding notes have described, constant current limiting can be used to prevent the load current from exceeding the pass transistor's maximum collector current rating and therefore protect it from being damaged. However, constant current limiting still allows the power dissipated by the pass transistor to increase which, if it exceeds the transistor's maximum power rating, could damage it anyway.

To understand why this happens, recall that once the constant current limiting circuit is activated, if the load attempts to draw more current, the output voltage goes down instead. This must mean that the potential difference across the pass transistor (that is, the voltage between its collector and emitter terminals) goes up, increasing the power it dissipates (remember, $P_{Q1} = I_{RL} \times V_{CE(Q1)}$).

If the power that the pass transistor would dissipate under these conditions is too big, foldback current limiting circuit can be used instead of constant current limiting. The foldback current limiting circuit is not shown or discussed here as the circuit and its operation are beyond the scope of this unit. However, its output current-voltage performance is shown in Figure 15 below.

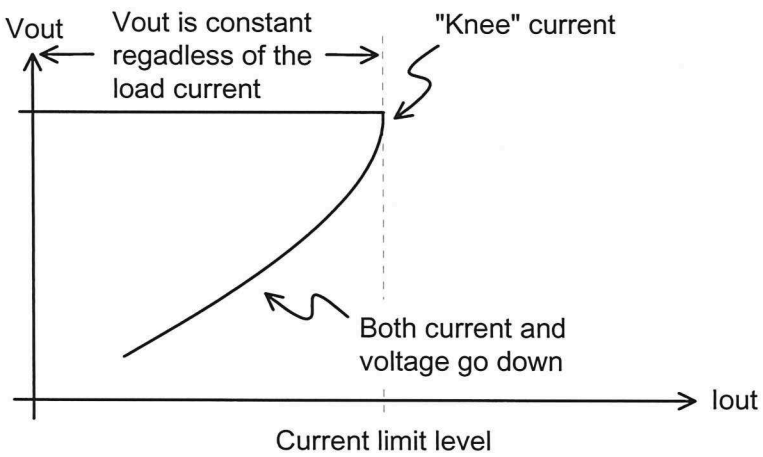

Figure 15 *The graph of output current versus output voltage for a series regulator with foldback current limiting*

Notice from the graph that, once current limiting is activated, if the load attempts to draw more current, both the output voltage and current go down. So, although the potential difference across the pass transistor would continue to rise (like it does with constant current limiting), the falling load current counteracts any significant rise in the pass transistor's power dissipation.

 Copyright: Not to be reproduced without permission

Student notes

Skill practice 5

Practise measuring load voltage, load current and potential differences around a series regulator with current limiting

This exercise is practise for the sorts of skills you may be required to perform in a practical test. Remember, in any practical tests you will be working alone so make sure that you can perform all the steps. It should take you about 45 minutes to complete this exercise.

Equipment

- Series regulator fault-finding panel
- IEC lead
- Interface panel
- two DMMs
- 27Ω 5W resistor
- 22Ω 5W resistor
- 15Ω 5W resistor
- 10Ω 10W resistor
- banana leads

Remember:

Follow TAFE NSW WHS guidance at all times!

 Copyright: Not to be reproduced without permission

Work tasks

1 Read your WHS responsibilities at the top of the form below. Then conduct a WHS risk assessment and record your findings in the space provided.

Responsibilities of students under the Model WHS Act: s28

- Take reasonable care for your own health and safety by working safely at all times
- Take reasonable care to ensure that your acts or omissions don't put the health and safety of others at risk
- Follow all TAFE NSW WHS guidance and comply with all reasonable instructions from TAFE NSW staff to assist them in complying with the TAFE NSW WHS requirements
- In addition to the above, you must:
  - use and maintain machinery, tools and all other equipment properly and safely
  - ensure that your work area is free of hazards
  - notify a TAFE NSW staff member of actual or potential hazards
  - wear/use prescribed safety equipment
  - take notice of any safety signs and adhere to their instructions

Risks involved in this activity include:	**Control measures:**
Trip hazards (eg students bags) Objects dropped on feet (while equipment is taken to and from workbenches).	Move bags and other objects from walkways Plan lifting of equipment
Others: _____	Other: _____
_____	_____
_____	_____

My signature here indicates that I have read and understand my responsibilities under the Model WHS Act s28 (detailed above). I have also conducted a risk assessment before undertaking this activity and have identified measures to control these risks and have implemented them.

Signature: _____ Date: _____

2 Gather the equipment needed for this exercise.

3 Use the IEC lead to connect the Series Regulator Fault-finding Panel to a GPO.

4 Turn on the panel.

5 Set all the fault switches to their normal (off) position.

6 Use a DMM to set the regulator's output to 9V by adjusting *RV1*.

7 Calculate the theoretical load current that would cause the current limiting circuit to activate. Record your answer in the space provided below.

Maximum output current

8 Connect the 27Ω resistor across the regulator's output with an ammeter in series with it to measure the load current.

9 Measure the load current using the ammeter's **A** setting (don't use the mA setting otherwise you'll blow the ammeter's fuse). Record your measurement in Table 1 below.

10 Measure and record the potential difference across *R3*.

Note: This is the voltage you measure by having the voltmeter's leads connected to either side of the resistor.

11 Circle the appropriate word to indicate whether you think that your measurements of load current and V_{R3} suggest that the current limiting is turned on or off.

Table 1	Load current	V_{R3}	Current limiting
27Ω load			ON / OFF
22Ω load			ON / OFF
15Ω load			ON / OFF
10Ω load			ON / OFF

 Copyright: Not to be reproduced without permission

12 Repeat Steps 8 to 11 for the remaining resistor values in Table 1.

The teacher needs to check your work at this point...

Question 1
Explain why your load current measurements support your conclusions about whether current limiting has been activated for the different load resistances.

27Ω load: _____

22Ω load: _____

15Ω load: _____

10Ω load: _____

Question 2
Explain why your measurements of V_{R3} support your conclusion about whether current limiting has been activated for the different load resistances.

27Ω load: _____

22Ω load: _____

15Ω load: _____

10Ω load: _____

The teacher needs to check your work at this point...

Review questions

Answer these questions to check your understanding of what you have learnt for this chapter. Doing this will also help to prepare you for the tests.

Questions 1 to 7 refer to the circuit in Figure 1 below

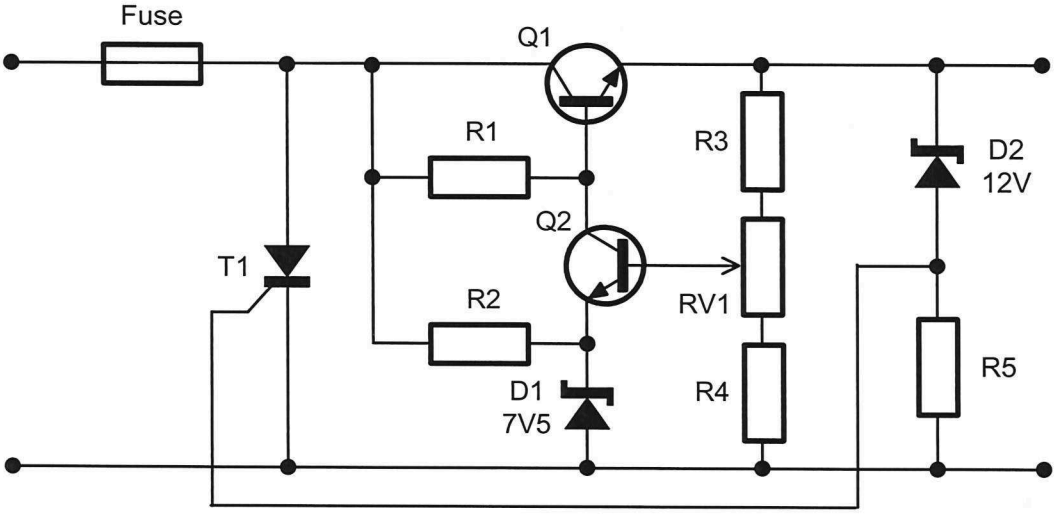

Figure 1

1 This circuit **doesn't** have

- ☐ error amplification for improved load regulation.
- ☐ current limiting.
- ☐ overvoltage protection.
- ☐ a variable output voltage.

2 What is the name for the type of protection that the circuit **does** have?

_____

3 List all of the components that are involved in that protection circuit.

_____

_____

_____

 Copyright: Not to be reproduced without permission

4 What is the full name of *T1*?

_____

5 What voltage activates the protection circuit?

_____

6 Briefly describe what happens when the over-voltage protection circuit is activated.

_____

_____

_____

_____

7 What is being protected from over-voltages by the crowbar protection circuit?

- ☐ The load
- ☐ D1
- ☐ The pass transistor
- ☐ Q2

Questions 8 to 11 refer to the circuit in Figure 2 below

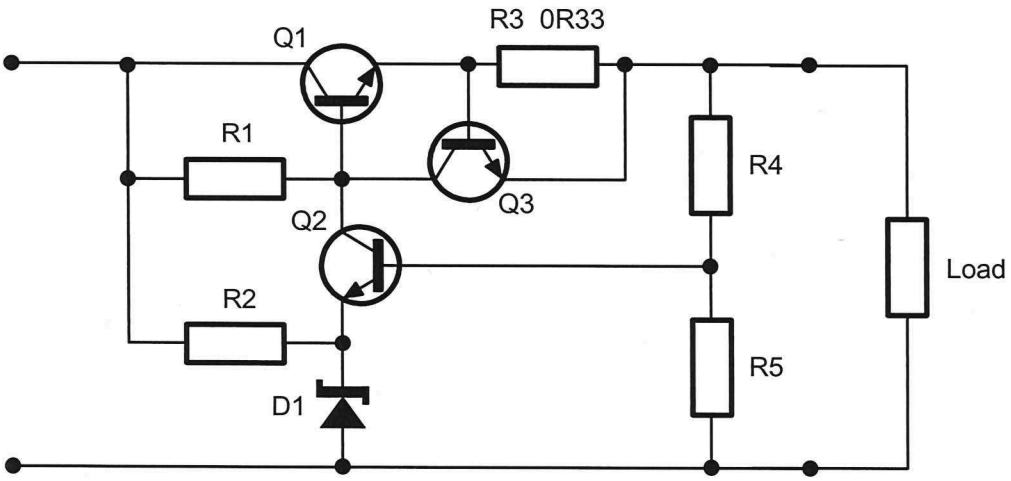

Figure 2

8 What type of protection do *Q3* and *R3* combine to provide?

_____

9 Calculate the load current that activates the protection circuit.

_____

10 When the load attempts to draw more than the maximum allowable current

- ☐ both the output voltage and load current go down.
- ☐ the output voltage goes down but the load current goes up.
- ☐ both the output voltage and load current go up.
- ☐ the output voltage goes down but the load current stays relatively constant.

11 What is being protected by the current limiting circuit?

- ☐ The load.
- ☐ D1.
- ☐ The pass transistor.
- ☐ Q2.

 Copyright: Not to be reproduced without permission

Question 12 refers to the circuit in Figure 3 below

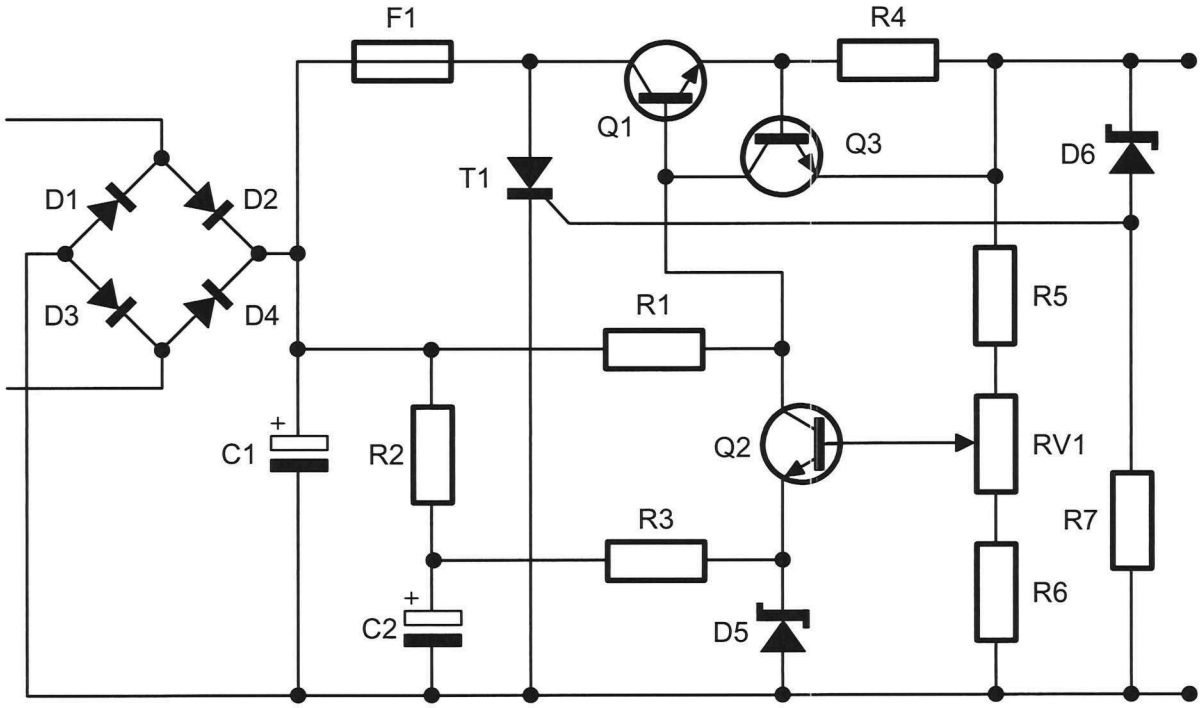

Figure 3

12 State the function of the following components:

D1 to D4: _____

C1: _____

R2 & C2: _____

R2 & R3: _____

D5: _____

RV1: _____

R5, R6 and RV1: _____

D6 & R7: _____

R4 & Q3: _____

T1 & F1: _____

Questions 13 to 25 refer to the circuit in Figure 4 below

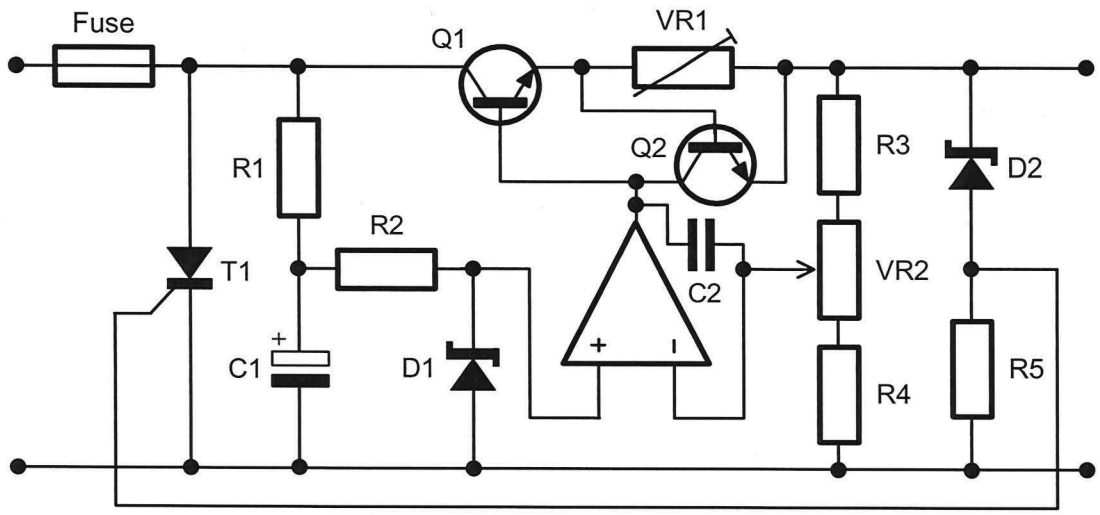

Figure 4

13 List all the components that are part of the over-voltage protection circuit.

_____

14 Which control do you adjust to change the circuit's current limit level?

_____

15 Which component or components set the current through *D1*?

_____

16 Which component helps to prevent high frequency oscillations from appearing at the output?

_____

17 Which component is destroyed when *T1* conducts?

_____

 Copyright: Not to be reproduced without permission

18 Which components provide DC negative feedback to the op amp?

_____

19 Which transistor has no collector-emitter current when the load current is below the circuit's current limit level?

_____

20 Which components have a current flowing through them that is the same as the load current?

_____

21 Which control do you adjust to change the circuit's output voltage?

_____

22 Which component has a potential difference that is the same as the voltage on the op amp's non-inverting input?

_____

23 List all the components that are part of the current limiting circuitry.

_____

24 Which components improve the circuit's line transient response?

_____

25 Which component sets the voltage that activates the crowbar protection circuitry?

_____

Section 6 An introduction to DC-DC converters

Purpose To develop your understanding of the basic principles of operation of DC to DC converters.

Objectives At the end of this section you should be able to:

- Draw the basic block diagram of the DC-DC converter
- Explain the function of each block in the basic block diagram of the DC-DC converter
- Name the four DC-DC converter configurations
- Describe the basic principle of operation of the four DC-DC converter configurations
- List some of the advantages and the disadvantage of using DC-DC converters to implement regulation instead of linear regulator circuits
- Use typical test equipment to measure voltages and signals around a simple DC-DC converter

 Copyright: Not to be reproduced without permission

Introduction

So far, you've been learning about the operation of discrete component linear series regulators. You'll recall that series regulation is generally preferred to shunt regulation because the closed-loop control provides much better load regulation performance. Possibly more importantly, series regulators are more efficient than shunt regulators (all things being equal). However, series regulation still experiences losses (usually in the form of heat dissipated by the pass transistor) and so it's not perfect.

DC-to-DC converters offer an alternative to linear regulators because they are much more efficient than both shunt and series regulation. This chapter introduces you to the four DC-DC converter configurations and explains their basic operation. The next chapter takes the topic further by showing you how closed-loop control is used regulate the output of DC-DC converters. The final chapter introduces you to switched-mode power supplies which are widely used to power supplies in equipment like personal computers.

Why efficiency matters so much

Recall that *efficiency* in electronics (and other engineering disciplines) is a measure of how much of the power into a system reaches the output of the system to do the work that the system is supposed to do. The difference between the power in and the power out is the losses which, by definition, is wasted power. Improving efficiency reduces the losses and this has the obvious benefit of reducing electricity consumption which, in turn, can save money on electricity bills and contribute to a sustainable energy future.

But efficiency has been a concern of engineers even before it was widely understood that human activity is warming the planet. In relation to regulator circuits, increased efficiency, and so fewer losses, means that a heatsink is often not needed to dissipate the heat that the losses generate. Or, where a heatsink is still needed, a much smaller one can be used. This provides costs savings (heatsinks are one of the more expensive electronics components) and space/weight savings (heatsinks can be bulky).

And for portable equipment requiring regulated supply voltages, the regulator's efficiency is critical to battery life. Fewer losses mean that a battery can power the device for longer before needing recharging.

With the many advantages that improved efficiency brings, it's easy to see why DC-DC converters are used to implement regulation and are preferred in many cases to linear regulator circuits.

DC-DC converters

DC-DC converters are highly efficient circuits that can step DC voltages up or down and even invert them (that is, turn a positive voltage into a negative voltage). (Transformers can do these things very efficiently too of course, but they're an AC device and cannot do so for DC.) And, with closed-loop control, DC-DC converters can achieve load and line regulation performance figures similar to series regulators.

That said, DC-DC converters have a problem too that can limit where they're used. The process necessarily involves switching and, for reasons that will be explained, this means that they can emit electromagnetic radiation which can interfere with nearby electronics.

Basic block diagram

Figure 1 below shows the basic block diagram of a DC-DC converter.

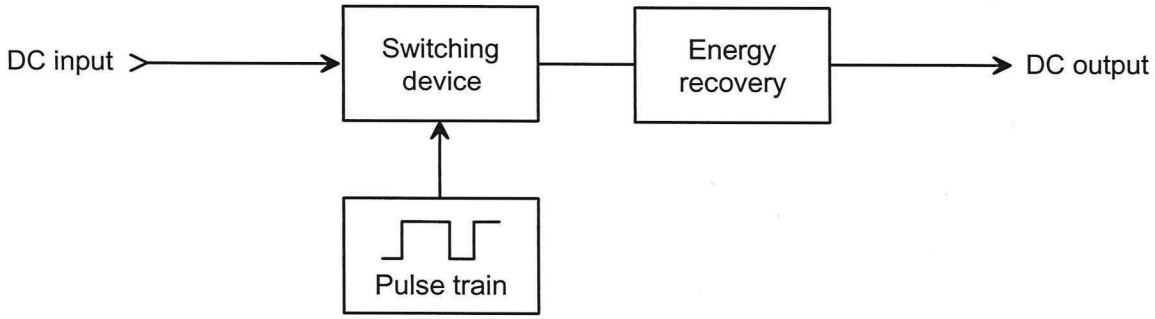

Figure 1 *The basic block diagram of a DC-DC converter (unregulated)*

The *switching device* can be either a BJT or a MOSFET. That said, BJTs are used in these notes for ease of comparison with series regulators.

Regardless of the type of transistor used, it's driven by a "pulse train" which, in this case, is a unipolar rectangular wave having a frequency from about 20kHz to 100kHz (and even higher) and also has a duty cycle that can be adjusted (more on the reason for this in the next chapter). The pulse train generator is simply shown as a block in this diagram because how this drive signal is generated is unimportant at this stage. What is important is that the pulse train's *mark* and *space* voltages (what would be called the high and low voltages in digital) are set so that the BJT is either driven into saturation or cut-off. Importantly, the BJT's operation is never allowed settle in its linear region (that is, the region in between cut-off and saturation).

As the switching device is turned on and off, the *energy recovery* circuit is needed to ensure that there is a continuous supply of current to the load. The operation of the energy recovery circuit is best explained with an example.

 Copyright: Not to be reproduced without permission

DC-DC converter configurations

There are four DC-DC converter configurations and they are:

- Step-down
- Inverting
- Step-up
- Isolating

The following notes explain the basic principle of operation of the four configurations.

The step-down configuration

The step-down configuration (also known as the "buck" converter) is so called because it produces a DC output voltage that is always lower than the circuit's DC input voltage.

Figure 2 below shows the basic step-down circuit. The transistor (*Q1*) is the switching device (the switching transistor) while the diode (*D1*), inductor (*L1*) and capacitor (*C1*) form the energy recovery circuit.

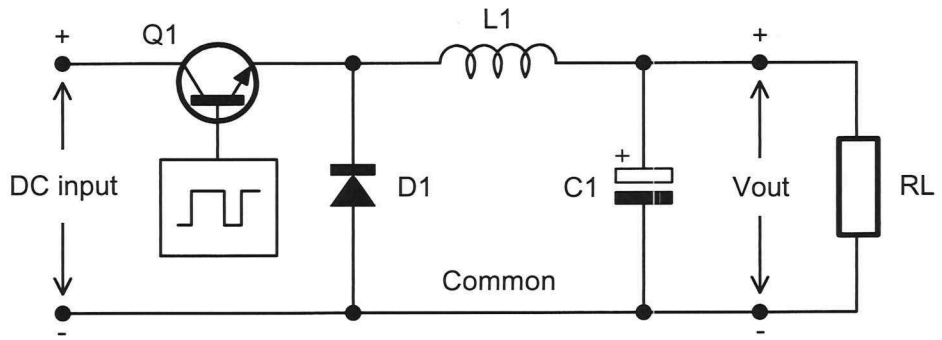

Figure 2 *The basic circuit of a step-down DC-DC converter*

As already mentioned, the voltage on the base of the switching transistor is a pulse train that turns it fully on (saturation) or fully off (cut-off). That being the case, it makes sense to consider the circuit's operation in terms of what happens during these two modes of the transistor's operation.

Q1 on

When when the pulse train goes high (the "mark") for the first time, the transistor turns on and current flows around the circuit. This is shown in Figure 3 below which also shows the polarity of the potential differences across the inductor and load.

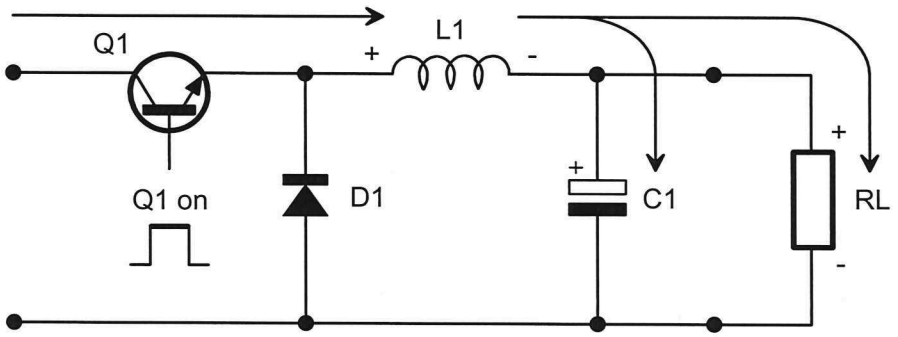

Figure 3 *The current around the circuit when Q1 is on (saturated)*

Notice that current flows into the capacitor as well as the load charging it up. Notice also that there is no current flowing through the diode. This is because the voltage on its cathode is only slightly less than the input voltage making it positive with respect to its anode and therefore reverse-biased.

Importantly, the current flowing through the inductor causes an electromagnetic field to build up about it (that is, the inductor is *energised*) and this is crucial to understanding what happens around the circuit when the transistor turns off.

Q1 off

The transistor turns off when the pulse train on its base is "low" (the "space"). When this happens, the transistor looks like an open-circuit and so the input no-longer provides the circuit with current.

As a consequence, the electromagnetic field about the inductor collapses developing a back emf across itself (which, by definition, is in the opposite polarity to the potential difference across it that generated its electromagnetic field in the first instance). The back emf induces a current back into the circuit and, as you know, conventional current flows out of the positive side of an EMF so the current continues to flow in the direction of the load returning to the inductor via the diode. These events are shown in Figure 4 on the next page.

 Copyright: Not to be reproduced without permission

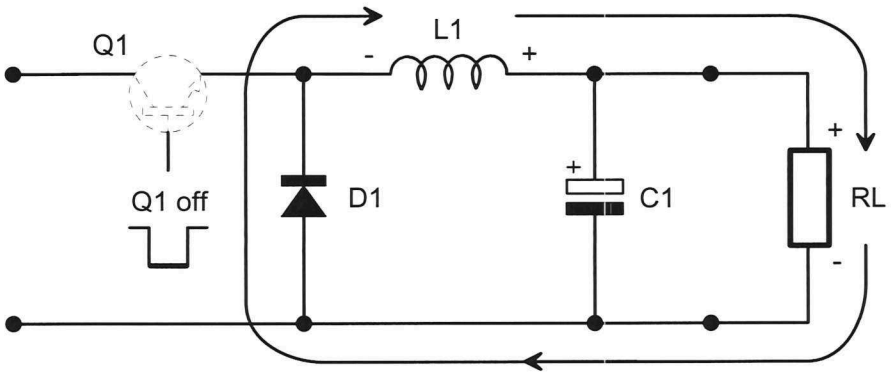

Figure 4 *The current around the circuit when Q1 is off (cut-off)*

As the electromagnetic energy stored in the inductor is depleted and the load current begins to drop, the output voltage also begins to drop. When this happens, the capacitor discharges as shown in Figure 5 below topping up the load current. In this way, the capacitor is acting like the smoothing capacitor in unregulated power supplies.

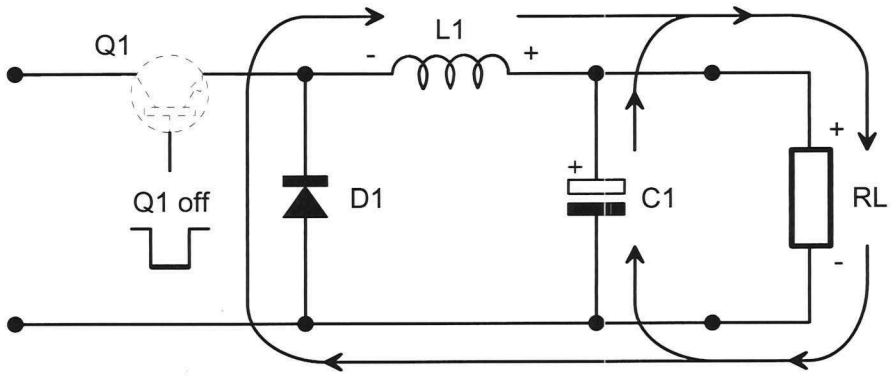

Figure 5 *The capacitor discharges via the load as the energy in the inductor depletes and the output voltage begins to drop off*

If you prefer to think of the smoothing capacitor in unregulated power supplies as a filter capacitor (that is, it shunts AC to ground letting only the DC pass to the load) then this explanation can be used here too. The transistor's switching generates a ripple across the output at the pulse train's frequency of oscillation. The capacitor shunts this high frequency ripple to ground letting only the DC pass to the load.

The relationship between output voltage and duty cycle

The size of the circuit's output voltage is affected by the pulse train's *duty cycle*. To explain, the output voltage is a function of the average energy delivered to the load directly from the DC input voltage when the transistor is on and the stored energy from the inductor when the transistor is off.

When the pulse train's duty cycle is small, the mark time is short relative to the space. This means that the transistor is on for only a short amount of time and so only a relatively small amount of energy is delivered directly to the load. Moreover, there's not much time for the inductor to energise and so the energy delivered to the load when the transistor is off is relatively small also. As a result, a small duty cycle produces a correspondingly small output voltage.

Conversely, when the pulse train's duty cycle is big, the mark time is long relative to the space. This means that the transistor is on for longer delivering much more energy directly to the load. At the same time, there's more time for the inductor to energise and so the energy delivered to the load when the transistor is off is greater. As a result, a bigger duty cycle produces a correspondingly bigger output voltage.

This relationship between the pulse train's duty cycle and output voltage is shown graphically in Figure 6 below.

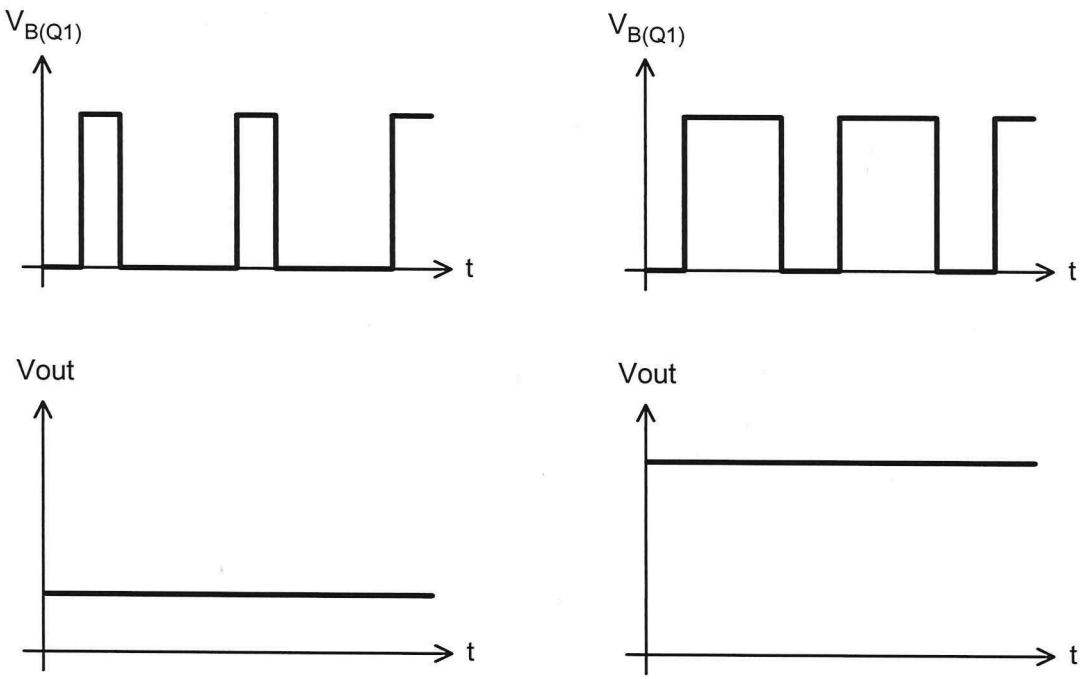

Figure 6 *The DC-DC converter's output voltage is proportional to the duty cycle of the pulse train that drives the switching transistor*

 Copyright: Not to be reproduced without permission

Importantly, the size of the output voltage for a given duty cycle is also affected by loading. That is, a given duty cycle produces different output voltages for different load resistances. This isn't the problem that it might seem though because additional circuit is normally used to regulate the output voltage of DC-DC converters.

The inverting configuration

The inverting configuration (also known as the "buck-boost" converter) is so called because it produces a DC output voltage that can be lower or higher than the circuit's DC input voltage but is always the opposite polarity. That is, if the circuit's DC input voltage is positive, its DC output voltage is negative and vice versa.

Figure 7 below shows the basic inverting circuit. The transistor (*Q1*) is the switching device (switching transistor) while the diode (*D1*), inductor (*L1*) and capacitor (*C1*) form the energy recovery circuit.

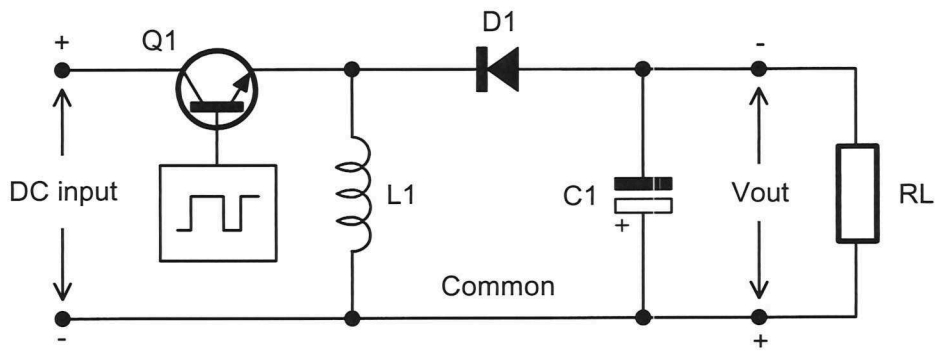

Figure 7 *The basic circuit of an inverting DC-DC converter*

Again, the circuit's operation is explained in terms of what happens when the transistor is turned on (and driven into saturation) and when it's turned off (cut-off) and so is not conducting.

Q1 on (for the first time)

When the pulse train goes high for the first time, the switching transistor turns on and current flows to common via the transistor and inductor. This is shown in Figure 8 below as well as the polarity of the potential difference across the inductor.

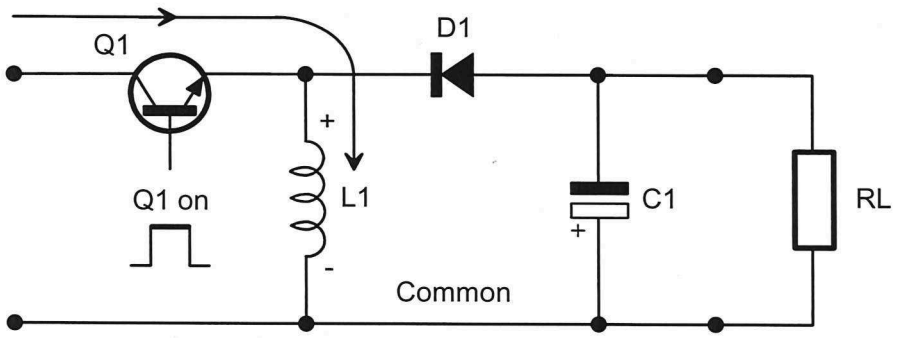

Figure 8 *The current around the circuit when Q1 is turned on for the first time*

Having just been turned on, the circuit's output voltage is zero volts. At the same time, the diode's cathode is a positive voltage because of its connection to the inductor. This means that the diode is reverse-biased and the current shown in Figure 8 above is the only current in the circuit. Importantly, this current energises the inductor.

Q1 off

When the pulse train goes low and the transistor turns off, the transistor looks like an open-circuit and so the input no-longer provides the circuit with current. This causes the electromagnetic field about the inductor to collapse developing a back emf that induces a current into the circuit in the direction shown in Figure 9 below.

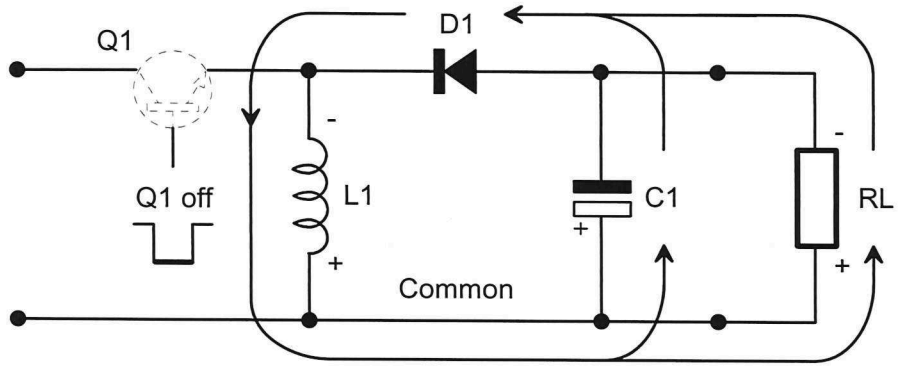

Figure 9 *The current around the circuit when Q1 is off*

 Copyright: Not to be reproduced without permission

This current develops a potential difference across the load that is negative with respect to common instead of positive. So, the circuit has a negative output voltage! At the same time, the current charges up the capacitor in the same polarity as the potential difference across the load.

Q1 on (for the second and all subsequent times)
When the transistor turns on for the second time (and every time after this), current flows in from the input again via the transistor and inductor. This makes the diode's cathode positive again while its anode is negative due to the polarity of the potential difference across the capacitor. This reverse-biases the diode again and so the capacitor discharges into the load keeping the output voltage smooth.

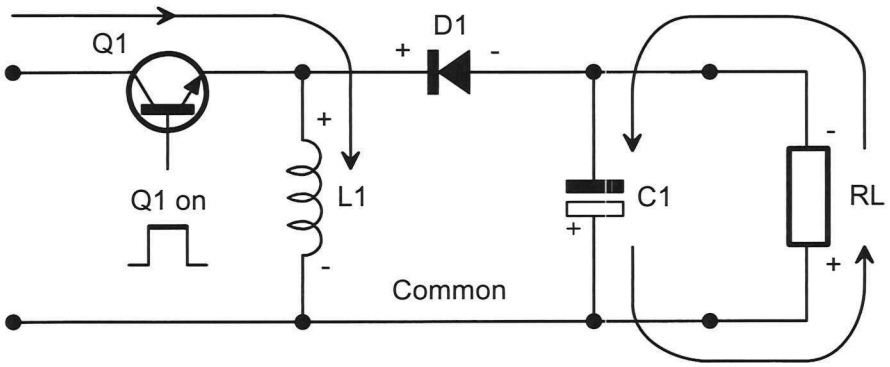

Figure 10 *The current around the circuit when Q1 is turned on for the second time (and every time after this)*

The step-up configuration

The step-up configuration (also known as the "boost" converter) and is so called because it produces a DC output voltage that is always higher than the circuit's DC input voltage.

Figure 11 below shows the basic step-up circuit. The transistor (*Q1*) is the switching device (switching transistor) while the diode (*D1*), inductor (*L1*) and capacitor (*C1*) form the energy recovery circuit.

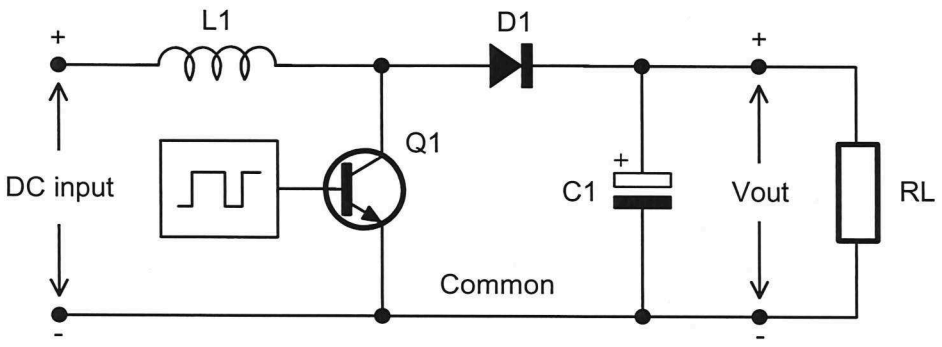

Figure 11 *The basic circuit of a step-up DC-DC converter*

Again, the circuit's operation is explained in terms of what happens when the transistor is turned on (and driven into saturation) and when it's turned off (cut-off) and so is not conducting.

Q1 on (for the first time)

When the pulse train goes high for the first time, the transistor turns on and current flows to common via the inductor and transistor. This is shown in Figure 12 below as well as the polarity of the potential difference across the inductor.

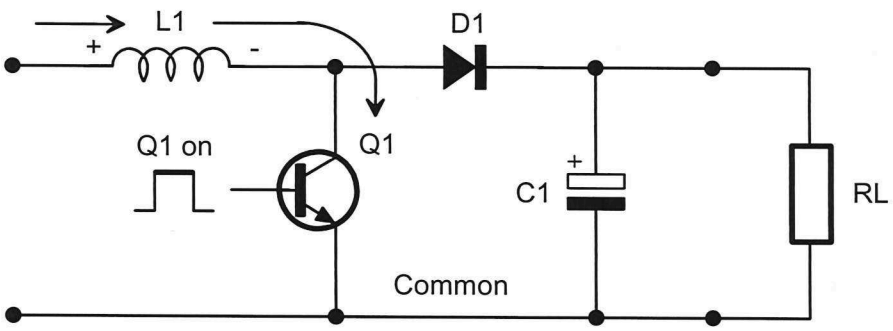

Figure 12 *The current around the circuit when Q1 is turned on for the first time*

 Copyright: Not to be reproduced without permission

Notice that all of the input current from the DC input voltage flows through the transistor and none of it passes through the diode to the load. This is because the potential difference across a saturated switching transistor is only about 0.2V at most. At the same time, the circuit's output voltage is zero. When these voltages are shown on the circuit (see Figure 13 below) we can see that the potential difference across the diode is the correct polarity but is too low to forward-bias it.

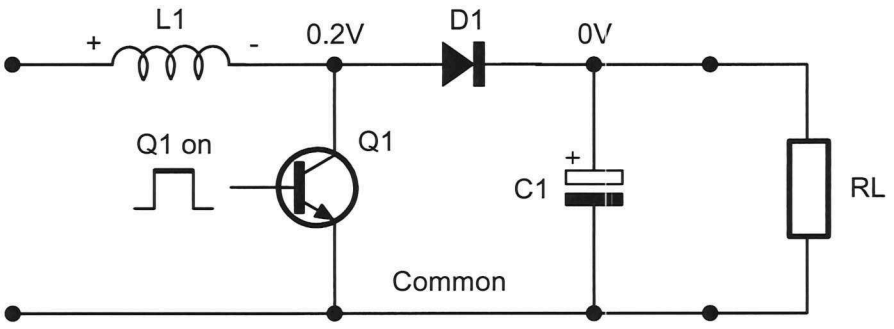

Figure 13 *The voltages (with respect to common) on either side of the diode when the transistor is turned on for the first time*

Importantly, like the previous two circuits, the current through the inductor energises it, storing energy for when the transistor is turned off.

Q1 off

When the pulse train goes low and the transistor turns off, the transistor looks like an open-circuit and so the current through the inductor wants to drop. But this develops a back emf across the inductor as shown in Figure 14 below and the collapsing electromagnetic field keeps the current flowing from left to right.

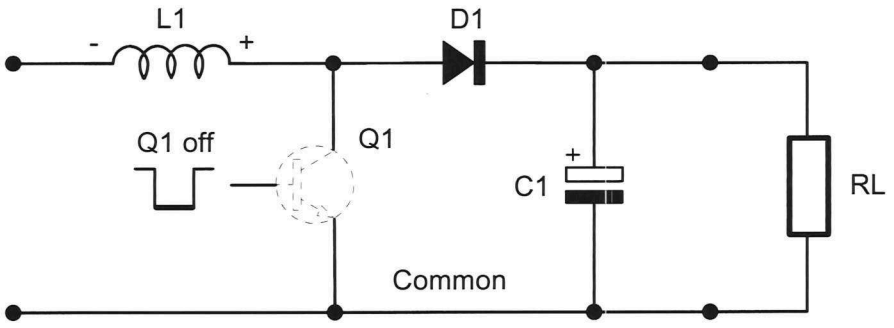

Figure 14 *The polarity of the back emf across the inductor when Q1 is off*

As the inductor is now acting like an EMF in the polarity shown, the circuit can be redrawn as shown in Figure 15 below with the inductor replaced by the symbol for a cell. And, if the DC input voltage is also shown using the symbol for a battery, you can see that the input voltage and the inductor's back EMF are in series with each other.

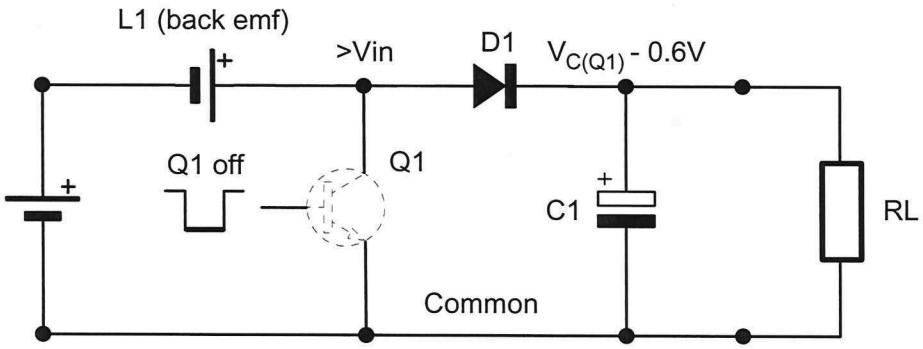

Figure 15 *The DC input voltage and the inductor's back emf combine as though they're two EMFs connected in series*

That being the case, the DC input voltage and the inductor's back emf are series-aiding and so the voltage on the diode's anode is bigger than the DC input voltage alone. The voltage across the load is 0.6V less that this (due to the diode's forward voltage drop). The current in the circuit during this time is shown in Figure 16 below and develops a potential difference across the load that is positive and charges up the smoothing/filtering capacitor.

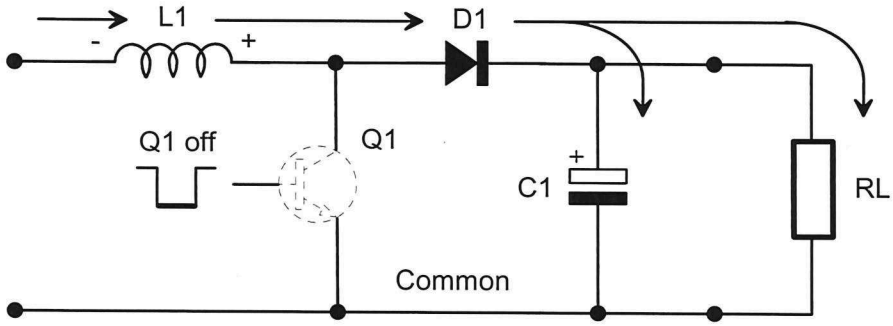

Figure 16 *The current in the circuit when the transistor is turned off*

 Copyright: Not to be reproduced without permission

Q1 on (for the second and all subsequent times)

When the transistor turns on for the second time (and every time after this), its collector voltage returns to 0.2V. As the diode's anode is still at a voltage that is bigger than the DC input voltage, it becomes reverse-biased again. This means that, although current continues to flow through the inductor, it does so via the transistor to ground. This current through the inductor is bigger than the current through it when the transistor was off because the transistor looks like a much lower resistance to ground than the load does. This allows the electromagnetic field about the inductor to increase again storing more energy for when the transistor turns off again. And, while all this is going on, the capacitor discharges into the load to smooth the output voltage. This is shown in Figure 17 below.

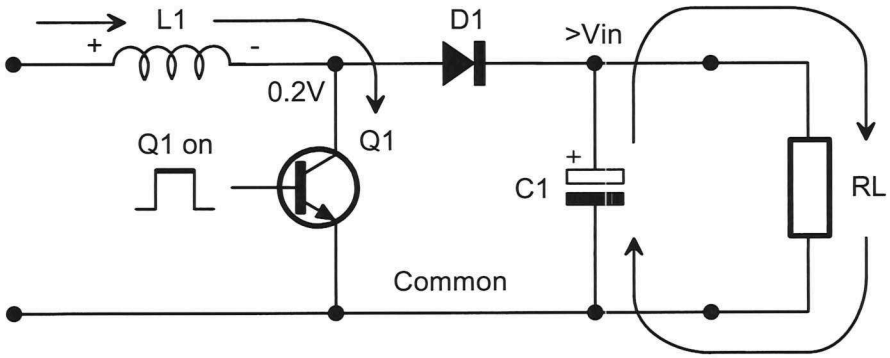

Figure 17 *The current around the circuit when Q1 is turned on for the second time (and every time after this)*

The isolating configuration

The isolating configuration is so called because it is the only configuration that provides electrical isolation between the circuit's input and output (which is a very important feature for offline DC-DC conversion that is discussed further in Section 8).

Isolation is achieved using a transformer which provides for several other benefits. First, the circuit can have an output voltage that is either bigger (boost) or smaller (buck) than the DC input voltage by choosing an appropriate turns ratio. Second, using a transformer with multiple secondary windings allows the circuit to provide multiple output voltages. Third, appropriate orientation of the diode and transformer windings allows either non-inverted and inverted DC output voltages. Clearly, this is a versatile configuration but with the disadvantage of needing a transformer, unlike the previous three configurations.

Figure 18 below shows the basic isolating circuit (with a non-inverted output). The transistor (*Q1*) is the switching device (switching transistor) while the diode (*D1*), transformer (*T1*) and capacitor (*C1*) form the energy recovery circuit.

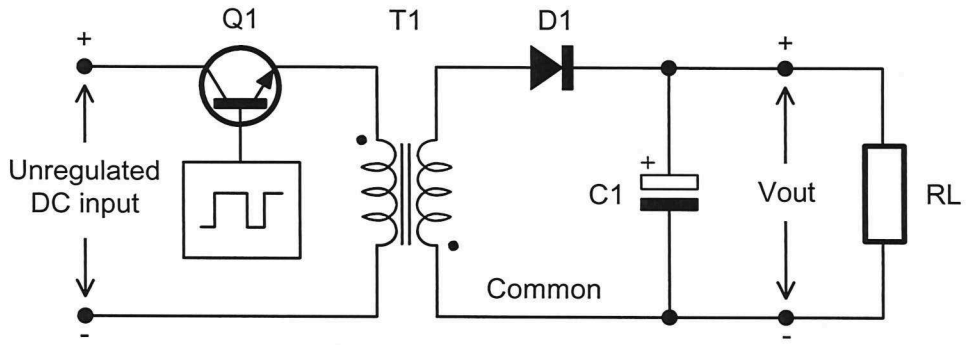

Figure 18 *The basic circuit of an isolating DC-DC converter (with a non-inverted output)*

The orientation of the transformer's windings is important to the circuit's operation and is shown using *dot convention*. There's a fuller explanation of dot convention in the workbook of an earlier subject but, in brief, the polarity of the voltage on the transformer's windings is the same at the end with the dot.

Another important design aspect of the transformer is its ability to store energy in the core (which is achieved by having a "gapped core" which you can look-up on the internet if you would like to know more). This is the opposite of mains transformers which are designed to transfer as much energy as possible to the secondary and store as little as possible in the core.

Again, the circuit's operation is explained in terms of what happens when the transistor is turned on (and driven into saturation) and when it's turned off (cut-off) and so is not conducting.

 Copyright: Not to be reproduced without permission

Q1 on (for the first time)
When the pulse train goes high for the first time, the switching transistor turns on and current flows through the transistor and the transformer's primary winding as shown in Figure 19 below.

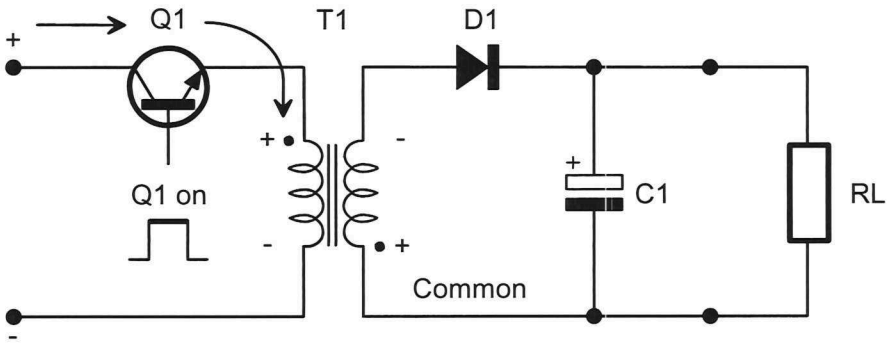

Figure 19 *The current around the circuit when Q1 is turned on for the first time*

Figure 19 also shows the polarity of the resulting voltages across both of the transformer's windings and it can be seen that, when the transistor is on, the diode is reverse-biased.

While current flows in the primary circuit, the transformer stores energy for later use just as the inductor does for the other configurations.

Q1 off
When the pulse train goes low and the transistor turns off, the transistor looks like an open-circuit and so the DC input voltage no-longer provides the transformer's primary winding with current. This causes the electromagnetic field stored in the transformer's core to collapse developing a back emf across both windings in the polarity that induces a current into the circuit in the direction also shown in Figure 20 below.

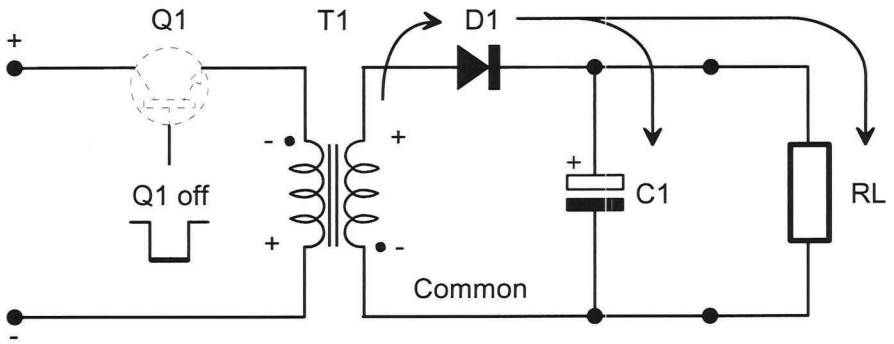

Figure 20 *The polarity of the back emf across the transformer's windings when Q1 is off*

This current develops a potential difference across the load that is positive and it charges up the smoothing/filtering capacitor.

Q1 on (for the second and all subsequent times)
When the transistor turns on for the second time (and every time after this), current flows through the primary winding again, reversing the polarity of the transformer's primary and secondary voltages and turning the diode off. During this time, the capacitor discharges into the load to smooth the output voltage as shown in Figure 21 below.

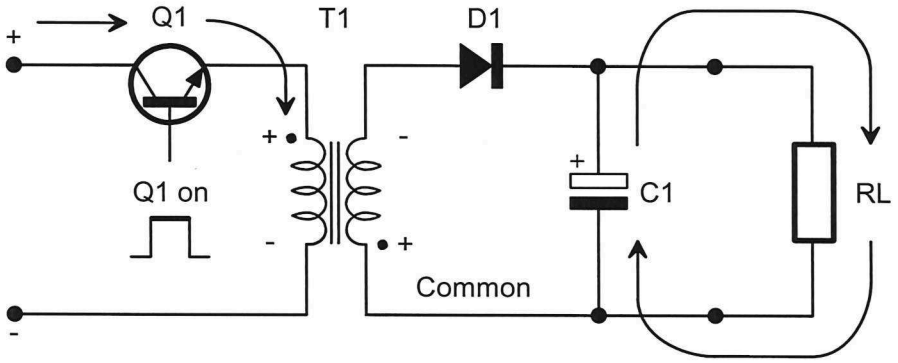

Figure 21 *The current around the circuit when Q1 is turned on for the second time (and every time after this)*

 Copyright: Not to be reproduced without permission

Why is the DC-DC converter so efficient?

From the description of the four DC-DC converter configurations' operation, it's not immediately obvious why they're so efficient. To return to this issue and explain it, consider the simple linear series regulator in Figure 22 below.

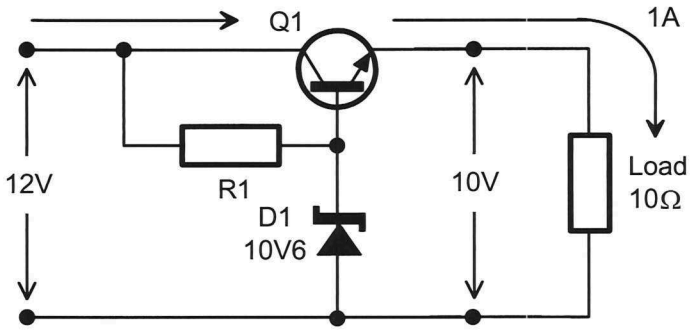

Figure 22 *1A flows through the pass transistor in a simple linear series regulator with a 10Ω load*

The circuit has been designed for a 10V output, across which a 10Ω load is connected making the current through the pass transistor 1A. Notice that he circuit has also been designed to be as efficient as possible by making the unregulated input voltage as small as allowable (that is, 2V bigger than the regulated DC output voltage). From this we can calculate that the power dissipated by the pass transistor is 2W ($P_{Q1} = 1A \times (12V - 10V) = 2W$). As the input power is 12W ($Pin = 12V \times 1A$), the 2W dissipated by the pass transistor (which is a loss) represents 16.67% of the circuit's input power. Put another way, the circuit's efficiency is 83.33%.

Contrast that with the simple step-down DC-DC converter in Figure 23 below with the same input voltage, output voltage and load.

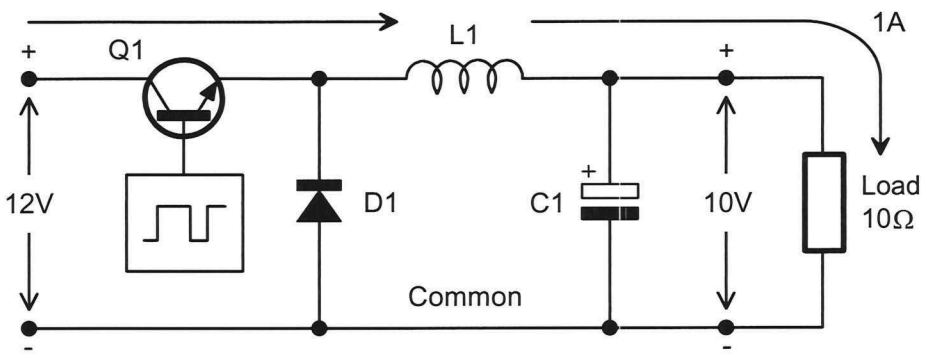

Figure 23 *1A flows through the switching transistor in a simple step-down DC-DC converter (regulated but this is not shown here) with a 10Ω load*

As the load conditions are the same as for the linear series regulator in Figure 22, the current through the switching transistor is also 1A. However, when the switching transistor in a DC-DC converter (regulated) is turned on, it is driven into saturation. Recall that the potential difference across a saturated switching transistor is only about 0.2V. This means that at 1A, the power that the switching transistor dissipates is only 200mW ($P_{Q1} = 1A \times 0.2V = 200mW$) as opposed to 2W. This represents a much lower proportion of the input power for a given output power (about 2% but the calculation isn't shown here) and so the circuit's efficiency is about 98%.

Moreover, the current through the transistor is not continuous (remember, the transistor turns on and off). When the power that the switching transistor dissipates is averaged across the entire on-off cycle, the efficiency is even better than the figure given above.

Copyright: Not to be reproduced without permission

Student notes

Skill practice 6

Practise measuring potential differences and signals around the circuit of a simple DC-DC converter

This exercise is practise for the sorts of skills you may be required to perform in a practical test. Remember, in any practical tests you will be working alone so make sure that you can perform all the steps. It should take you about 1¼ hours to complete this exercise.

Equipment

- prototyping panel
- DMM
- PIC10F220 (pre-programmed as a PWM)
- TIP32C transistor
- BC548
- 1N5819 diode (Schottky)
- 1N4730A 3V9 zener diode
- 8.2mH 0.3A power inductor
- 20kBΩ potentiometer
- 100Ω ¼W resistor
- 100Ω 5W resistor
- 10kΩ ¼W resistor
- three 1kΩ ¼W resistors
- 100µF 63V electrolytic capacitor
- BNC to alligator-clip lead
- banana leads
- hook-up wire
- wire strippers

Pinout data

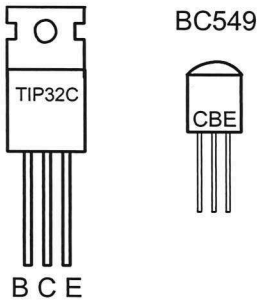

Remember:

Follow TAFE NSW WHS guidance at all times!

 Copyright: Not to be reproduced without permission

Work tasks

1. Read your WHS responsibilities at the top of the form below. Then conduct a WHS risk assessment and record your findings in the space provided.

Responsibilities of students under the Model WHS Act: s28

- Take reasonable care for your own health and safety by working safely at all times
- Take reasonable care to ensure that your acts or omissions don't put the health and safety of others at risk
- Follow all TAFE NSW WHS guidance and comply with all reasonable instructions from TAFE NSW staff to assist them in complying with the TAFE NSW WHS requirements
- In addition to the above, you must:
  - use and maintain machinery, tools and all other equipment properly and safely
  - ensure that your work area is free of hazards
  - notify a TAFE NSW staff member of actual or potential hazards
  - wear/use prescribed safety equipment
  - take notice of any safety signs and adhere to their instructions

Risks involved in this activity include:	**Control measures:**
Trip hazards (eg students bags) Objects dropped on feet (while equipment is taken to and from workbenches).	Move bags and other objects from walkways Plan lifting of equipment
Others: _____	Other: _____
_____	_____
_____	_____

My signature here indicates that I have read and understand my responsibilities under the Model WHS Act s28 (detailed above). I have also conducted a risk assessment before undertaking this activity and have identified measures to control these risks and have implemented them.

Signature: _____ Date: _____

2. Gather the equipment needed for this exercise.

3. Wire the circuit of Figure 1 on the prototyping panel.

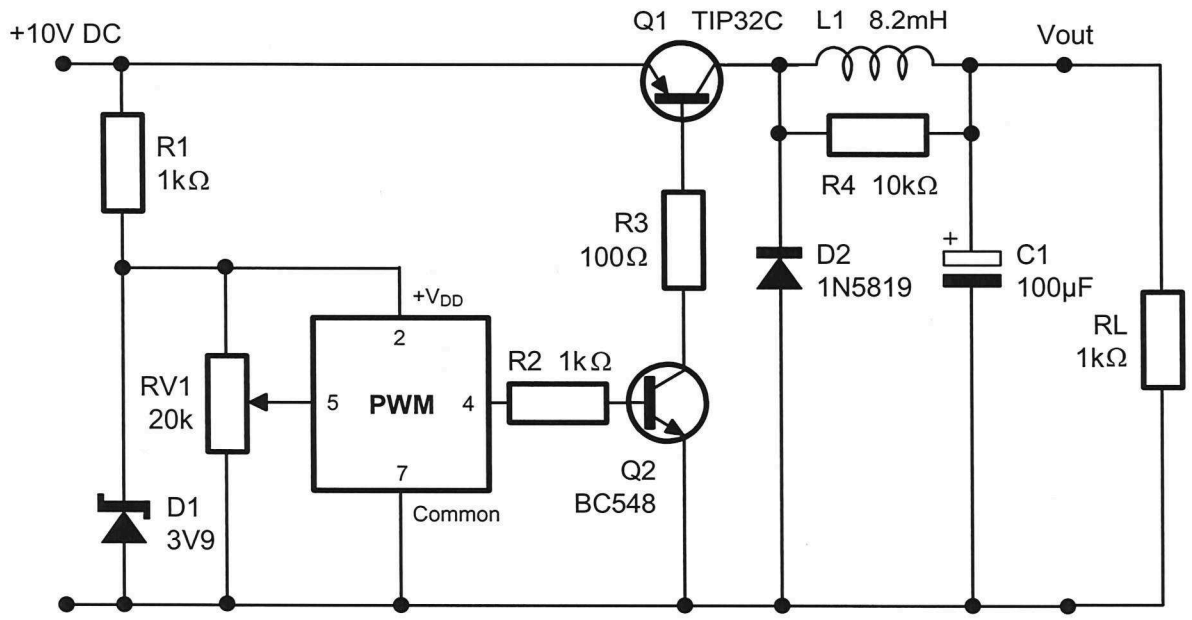

Figure 1

4. Read the brief circuit description below before proceeding.

Circuit description
To keep wiring to a minimum, the input to the circuit is taken from a regulated DC power supply (instead of via a transformer and rectifier as you might normally see).

As the PIC's supply voltage specification is only 2 to 5 volts, a simple zener diode shunt regulator is used to step-down the input voltage to an appropriate level.

The PWM is a PIC10F220 that has been programmed to output a pulse train. The pulse train's mark-space ratio is proportional to the size of the analog voltage on the PIC's pin-5 which is in turn set by a potentiometer.

As the PIC output's mark voltage is the same as the PIC's supply voltage, a NPN common collector arrangement would provide a maximum load voltage of only about 3.3V. So, a PNP common emitter arrangement is used. For this arrangement to work though, *Q2* is needed to turn it's base current on and off. This is commonly done.

 Copyright: Not to be reproduced without permission

5. Set the bench-mounted DC power supply for a 10V output then turn it off.

6. Connect the power supply to the circuit's input.

7. Connect the DMM to the DC-DC converter's output.

8. Turn on the DC power supply.

9. Vary the potentiometer while noting the circuit's output voltage.

   Self check
   You should measure a DC voltage that varies somewhere between about 3V and 9V. If you don't, turn off your circuit immediately and check your wiring. If you still can't get the circuit to work, call the teacher.

10. Connect the CRO's Channel 1 input to pin-4 of the PIC.

11. Adjust the CRO to observe the pulse train as a stable trace on the display.

12. Vary the potentiometer while noting the pulse train's duty cycle and circuit's output voltage.

Question 1
What is the relationship between the pulse train's duty cycle and the DC-DC converter's output voltage?

_____

_____

The teacher needs to check your work at this point...

13. Use the potentiometer to set the switching circuit's output to about 4V.

14. Adjust the potentiometer so that the duty cycle of the pulse train out of the PWM is exactly 10% (that is, the mark-space ratio is 1:9).

Note: To do this as accurately as possible follow the instructions below.

Setting the duty cycle to a exactly 10%

i) Check that the CRO is triggered on the positive edge of the pulse train.

ii) Set the CRO's *Timebase* control to *20μs/div* setting.

iii) Adjust the CRO's *Horizontal Position* control so that the start of the trace lines up with the first vertical line on the CRO's graticule.

iv) Adjust the CRO's *Timebase Calibration* control so that the beginning of the second mark on the display starts on the last vertical line on the CRO's graticule.

Note: You've been told many times always make sure that this control is in the *detent* position and to leave it there. If you don't, your time measurements will be incorrect. However, we're not making time measurements here so this is not an issue. Instead, we're interested in setting the ratio of mark time to space time.

v) Vary the potentiometer until the signal's mark time is exactly one division.

Note: When the mark time is one division and the period of the pulse train is ten divisions, the mark-space ratio is 1:9 and so the duty cycle is 10%.

 Copyright: Not to be reproduced without permission

15. Measure the circuit's output voltage. Record your measurement in Table 1 below.

16. Adjust the pulse train's duty cycle for exactly 20%. To do this, use the potentiometer to set the mark to two divisions instead of one.

17. Measure and record the circuit's output voltage.

18. Repeat steps 15 and 16 for the remaining duty cycles listed in the table.

Table 1

Duty cycle	Output voltage	Duty cycle	Output voltage
10%		60%	
20%		70%	
30%		80%	
40%		90%	
50%			

19. Graph your results above in the space provided below and write "1kΩ load" next to the line of best fit.

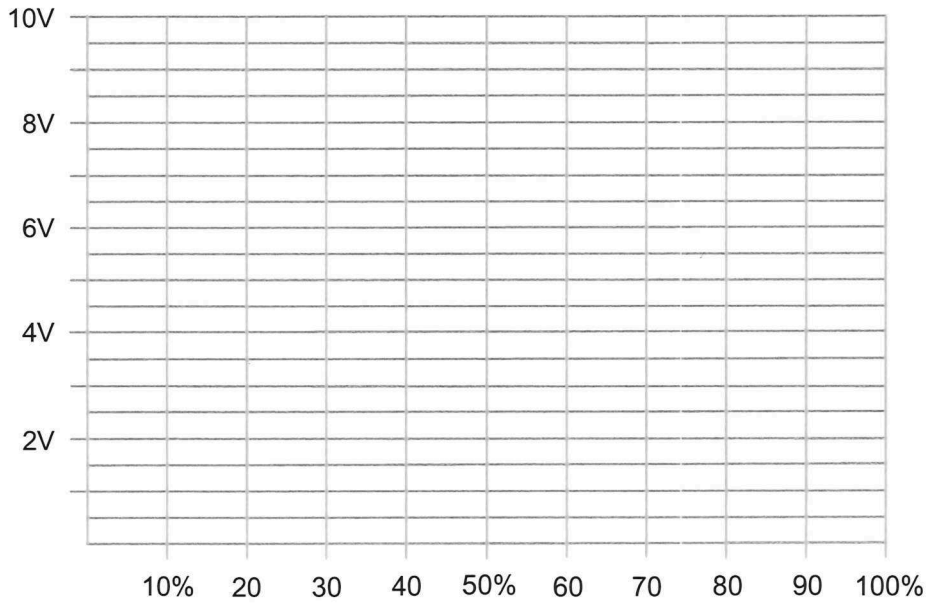

The teacher needs to check your work at this point...

20. Turn off the bench-mounted power supply.

21. Substitute the 1kΩ load for a 100Ω load.

    Note: Connect the new resistor between two terminal posts - Don't try to stick the leads into the breadboard's holes as you'll likely damage them.

22. Turn the power supply back on.

23. Measure duty cycle versus output voltage again recording your results in Table 2 below.

Table 2

Duty cycle	Output voltage	Duty cycle	Output voltage
10%		60%	
20%		70%	
30%		80%	
40%		90%	
50%			

24. Graph your results above on the same graph as before and write "100Ω load" next to the line of best fit.

Question 2
Why is the switching circuit's output voltage consistently lower across all duty cycles?

_____

_____

 Copyright: Not to be reproduced without permission

The teacher needs to check your work at this point...

25. Turn off the bench-mounted power supply and return the load to 1kΩ.

26. Turn the power supply back on and set the circuit's output voltage to exactly 6V.

27. Measure the duty cycle of the PWM's output pulse train. Record your measurement in Table 3 below.

28. Turn off the bench-mounted power supply and change the load to 100Ω again.

29. Set the circuit's output voltage to exactly 6V again and repeat Step 26.

Table 3	1kΩ load	100Ω load
Duty cycle for 6V output		

Question 3
The results in Table 3 show that he one output voltage can be obtained by two (or more) different duty cycles for the pulse train on the PWM's output. Why is this so?

_____

_____

Question 4
What are the implications of this when introducing negative feedback to make the output regulated (at, say, 6V)?

_____

_____

_____

The teacher needs to check your work at this point...

Copyright: Not to be reproduced without permission

Student notes

Review questions

Answer these questions to check your understanding of what you have learnt for this chapter. Doing this will also help to prepare you for the tests.

1. Regulators implemented using a DC-DC converter are less likely than series regulators to need a heatsink because

   ☐ they're much more efficient.
   ☐ they're much less efficient.
   ☐ have better line and load regulation.
   ☐ have worse line and load regulation.

2. What are the knock-on benefits of DC-DC converters being less likely to need a heatsink?

   ☐ They can be lighter
   ☐ They can be smaller
   ☐ They can be cheaper to make
   ☐ All of the above

3. What is the disadvantage of DC-DC converters?

   _____

   _____

   _____

4. Name the four DC-DC converter configurations.

   _____

   _____

   _____

   _____

5. Which DC-DC converter configuration always has a lower output voltage than input voltage?

   _____

 Copyright: Not to be reproduced without permission

6. Which DC-DC converter configurations can have an output voltage that is bigger than the input voltage?

_____

7. Which DC-DC converter configurations output a negative voltage from a positive DC input voltage?

_____

8. Which DC-DC converter is also referred to as the "buck-boost" converter?

- ☐ Inverting
- ☐ Step-up
- ☐ Step-down

9. Which DC-DC converter is also referred to as the "buck" converter?

- ☐ Inverting
- ☐ Step-up
- ☐ Step-down

10. Which DC-DC converter configuration turns on the switching transistor during the pulse train's mark time?

- ☐ Step-up
- ☐ Inverting
- ☐ Step-down
- ☐ Isolating
- ☐ All of the above

Questions 11 to 15 refer to the circuit in Figure 1 below

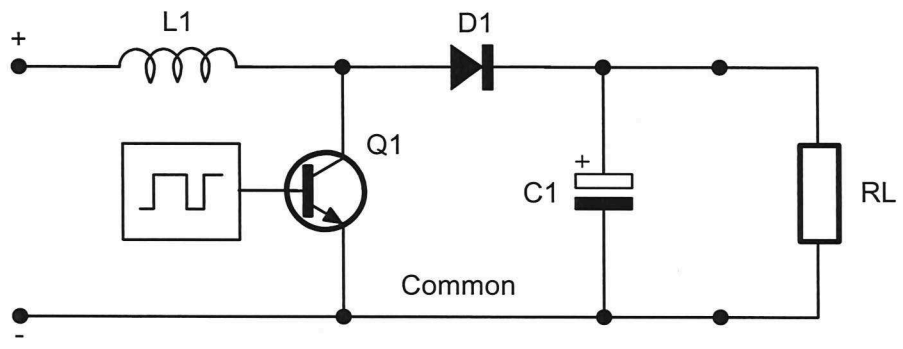

Figure 1

11. What is the name of this DC-DC converter configuration?

_____

12. What's another name for this DC-DC converter configuration?

_____

13. Which of the following statements best describes the circuit's output voltage?

- ☐ It's always smaller than the input voltage and non-inverted.
- ☐ It can be either smaller or bigger than the input voltage and inverted.
- ☐ It's always bigger than the input voltage and non-inverted.
- ☐ It's always bigger than the input voltage and inverted.
- ☐ It can be either smaller or bigger than the input voltage and inverted or non-inverted.

14. Show on Figure 1 the currents around the circuit when the switching transistor is turned on. Assume the circuit has been running for at least one complete cycle of the pulse train.

15. Use a different coloured pen to show on Figure 1 the currents around the circuit when the switching transistor is turned off.

 Copyright: Not to be reproduced without permission

Questions 16 to 19 refer to the circuit in Figure 2 below

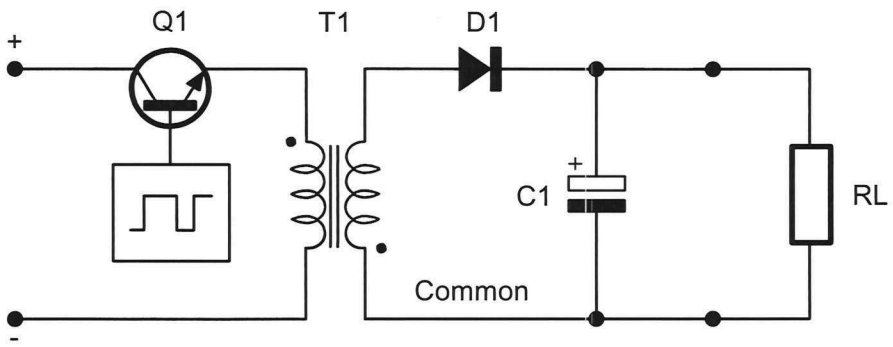

Figure 2

16. What is the name of this DC-DC converter configuration?

_____

17. Which of the following statements best describes the circuit's output voltage?

- ☐ It's always smaller than the input voltage and non-inverted.
- ☐ It can be either smaller or bigger than the input voltage and inverted.
- ☐ It's always bigger than the input voltage and non-inverted.
- ☐ It's always bigger than the input voltage and inverted.
- ☐ It can be either smaller or bigger than the input voltage and inverted or non-inverted.

18. Show on Figure 2 the currents around the circuit when the switching transistor is turned on. Assume the circuit has been running for at least one complete cycle of the pulse train.

19. Use a different coloured pen to show on Figure 2 the currents around the circuit when the switching transistor is turned off.

Questions 20 to 23 refer to the circuit in Figure 3 below

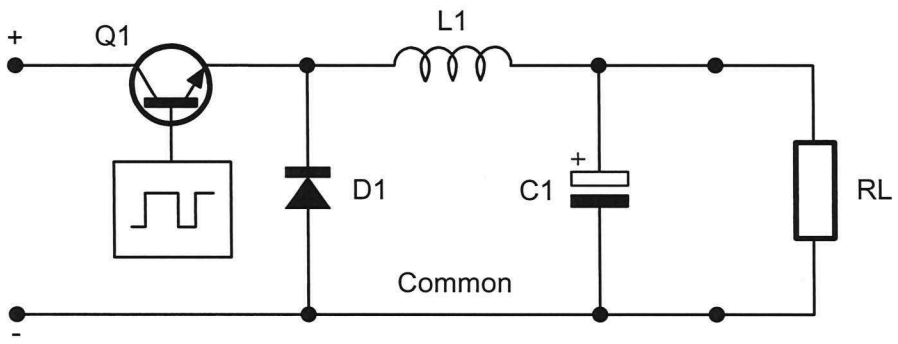

Figure 3

20. What is the name of this DC-DC converter configuration?

_____

21. Which of the following statements best describes the circuit's output voltage?

- ☐ It's always smaller than the input voltage and non-inverted.
- ☐ It can be either smaller or bigger than the input voltage and inverted.
- ☐ It's always bigger than the input voltage and non-inverted.
- ☐ It's always bigger than the input voltage and inverted.
- ☐ It can be either smaller or bigger than the input voltage and inverted or non-inverted.

22. Show on Figure 3 the currents around the circuit when the switching transistor is turned on.

23. Use a different coloured pen to show on Figure 3 the currents around the circuit when the switching transistor is turned off.

 Copyright: Not to be reproduced without permission

Questions 24 to 27 refer to the circuit in Figure 4 below

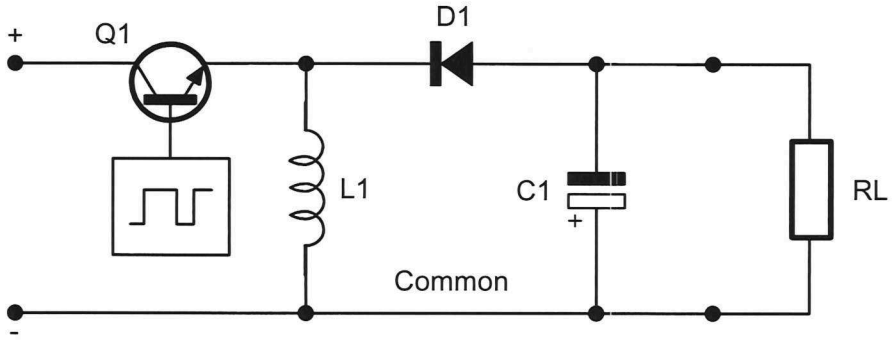

Figure 4

24. What is the name of this DC-DC converter configuration?

_____

25. Which of the following statements best describes the circuit's output voltage?

- ☐ It's always smaller than the input voltage and non-inverted.
- ☐ It can be either smaller or bigger than the input voltage and inverted.
- ☐ It's always bigger than the input voltage and non-inverted.
- ☐ It's always bigger than the input voltage and inverted.
- ☐ It can be either smaller or bigger than the input voltage and inverted or non-inverted.

26. Show on Figure 4 the currents around the circuit when the switching transistor is turned on. Assume the circuit has been running for at least one complete cycle of the pulse train.

27. Use a different coloured pen to show on Figure 4 the currents around the circuit when the switching transistor is turned off.

Section 7 DC-DC converters with closed-loop control using op amp error amplification

Purpose To deepen your understanding of switching regulation so that you're better able to locate the specific problem in faulty switching regulator circuits.

Objectives At the end of this section you should be able to:

- Draw the functional block diagram of DC-DC converters with closed-loop control (switching regulators)
- Explain how closed-loop control (error amplification) provides for DC-DC converters with line and load regulation
- Recognise DC-DC converter circuits with closed-loop control (both fixed and variable output)
- Identify the configuration used in DC-DC converters with closed-loop control (both fixed and variable output)
- Describe the function of every component in the error amplifier of DC-DC converters with closed-loop control (both fixed and variable output)
- Predict the voltages around the circuit of DC-DC converter circuits with closed-loop control (both fixed and variable output)
- Predict the output voltage of DC-DC converter circuits implemented using integrated circuits
- State the effects of typical faults in DC-DC converter circuits with closed-loop control (both fixed and variable output)
- Use typical test equipment to measure voltages around the circuit of DC-DC converter circuits with closed-loop control

 Copyright: Not to be reproduced without permission

Introduction

Section 6 introduced you to the four DC-DC converter configurations and explained their basic principle of operation. Importantly, none of the circuits used for this purpose produced regulated output voltages and, in this regard, the circuits were incomplete. This chapter explains how DC-DC converters with regulated output voltages are achieved.

DC-DC converters with closed-loop control

Figure 1 below shows the basic functional block diagram of DC-DC conversion introduced in Section 6 but with additional blocks added for closed-loop control to obtain a regulated output voltage.

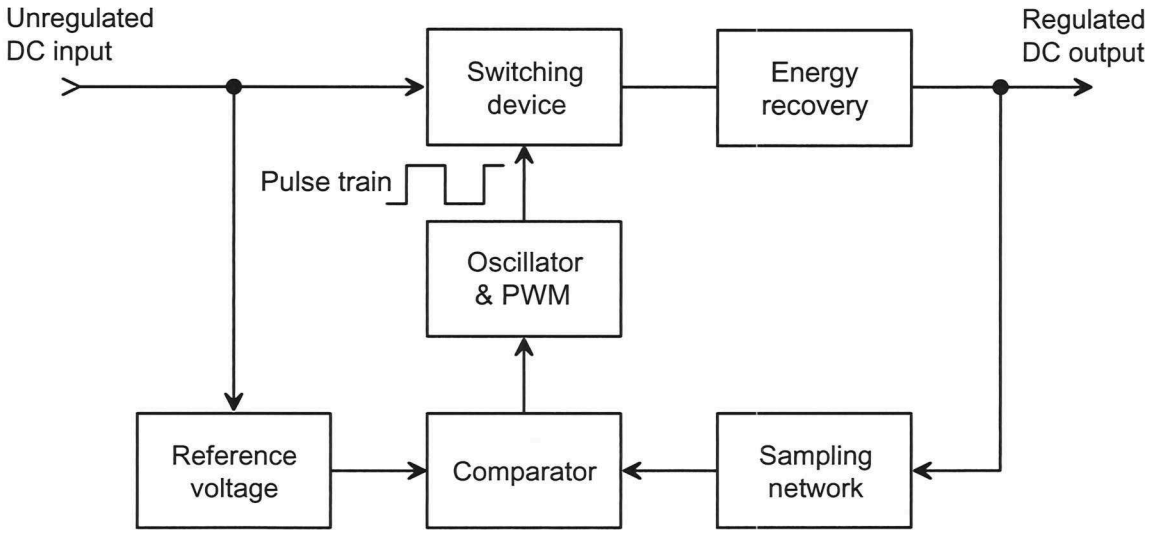

Figure 1 *The block diagram of a DC-DC converter with closed-loop control*

If you compare the diagram above with the diagram on page 6-3 you'll see that it has the blocks essential to DC-DC conversion (ie the energy recovery circuit, switching device, and Oscillator & PWM block (the latter simply being shown as a pulse train generator).

The sampling network, comparator and reference voltage blocks were not in the diagram on page 6-3 but you have seen them before and so should recognise them (if not, look at the diagram on page 3-12!). That's because closed-loop control of DC-DC converters can be done in exactly the same way as for series regulator circuits. The output voltage is sampled and is compared to a reference voltage to detect "errors" (that is, changes in output voltage). When they occur, the comparator produces a change on its output that the Oscillator & PWM block uses to change the pulse train's duty cycle (or sometimes both the duty cycle and the frequency) and correct the error, returning the output to the voltage that it's supposed to be.

If the error is caused by a drop in output voltage, the PWM increases the pulse train's duty cycle. This increases average energy directly to the load and/or to the energy recovery circuit (depending on the configuration) which increases the output voltage. If the error is caused by a drop in output voltage, the PWM decreases the pulse train's duty cycle to reduce the output voltage.

Regulated DC-DC converter circuits (also known as switching regulators)

Figure 1 shows below shows the circuit of the step-down DC-DC converter configuration but with the necessary extra components to implement closed-loop control (except for the Oscillator & PWM).

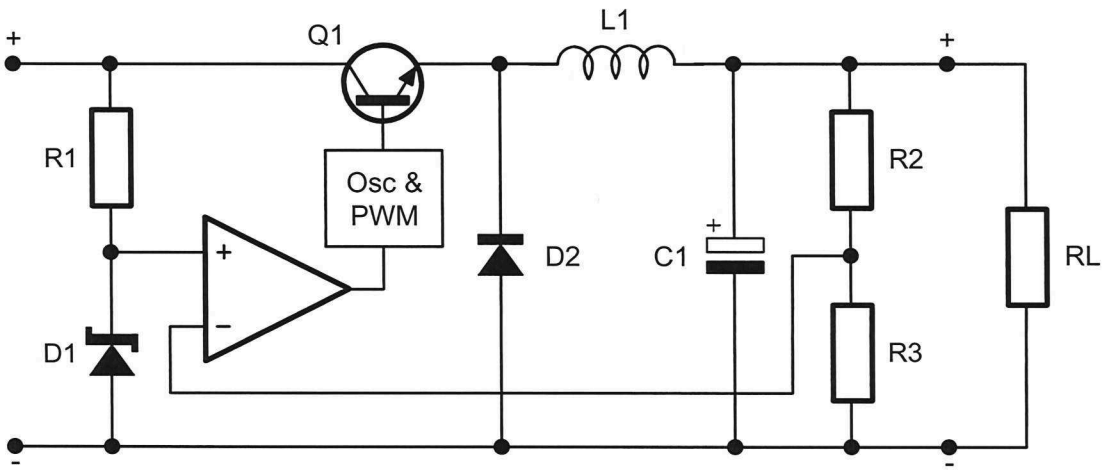

Figure 1 *The step-down DC-DC converter with closed-loop control to provide regulation*

As you can see, *R1* and *D1* form the voltage reference which provides the necessary line regulation. Like in series regulators, the zener diode can be substituted for a temperature compensated zener diode or a bandgap reference diode for improved line regulation. Resistors *R2* and *R3* form the sampling network and provide negative feedback to the op amp. The op amp compares the output voltage to the reference to generate the error signal for the Oscillator & PWM block.

Conveniently, the method of calculating the output voltage is the same as for series regulators with op amp error amplification (which for the circuit above is: $Vout = V_{REF} \times (\frac{R2}{R3} + 1)$).

 Copyright: Not to be reproduced without permission

Figures 2 and 3 below and Figure 4 on the next page show how this method is used to provide regulation to the inverting, step-up and isolating configurations. The same equation is used to calculated their output voltage.

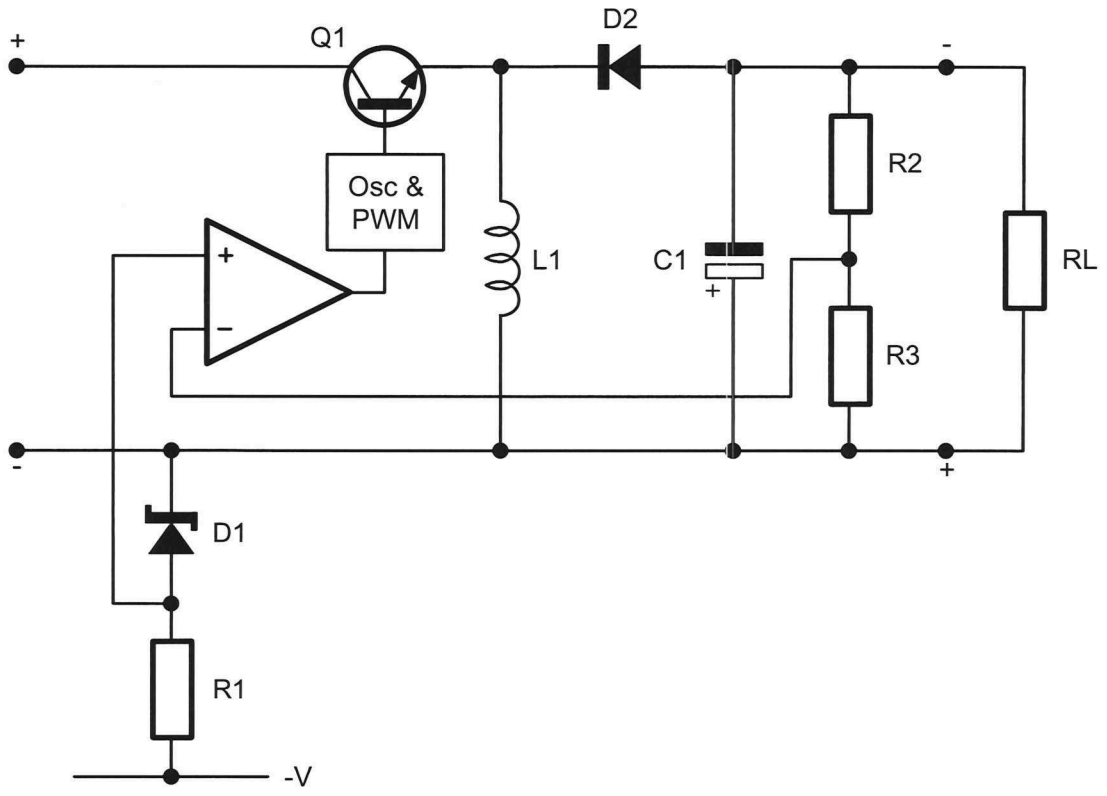

Figure 2 *The inverting DC-DC converter with closed-loop control to provide regulation*

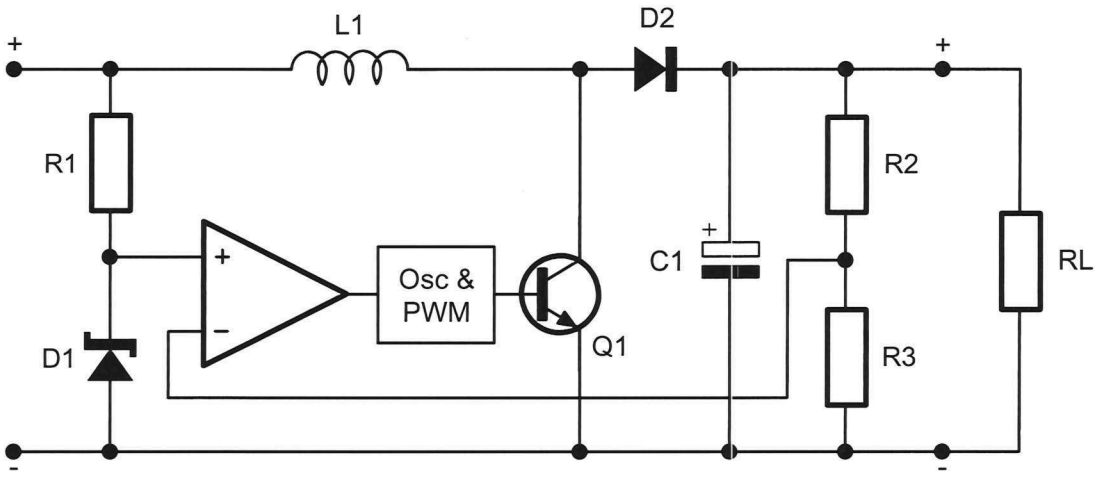

Figure 3 *The step-up DC-DC converter with closed-loop control to provide regulation*

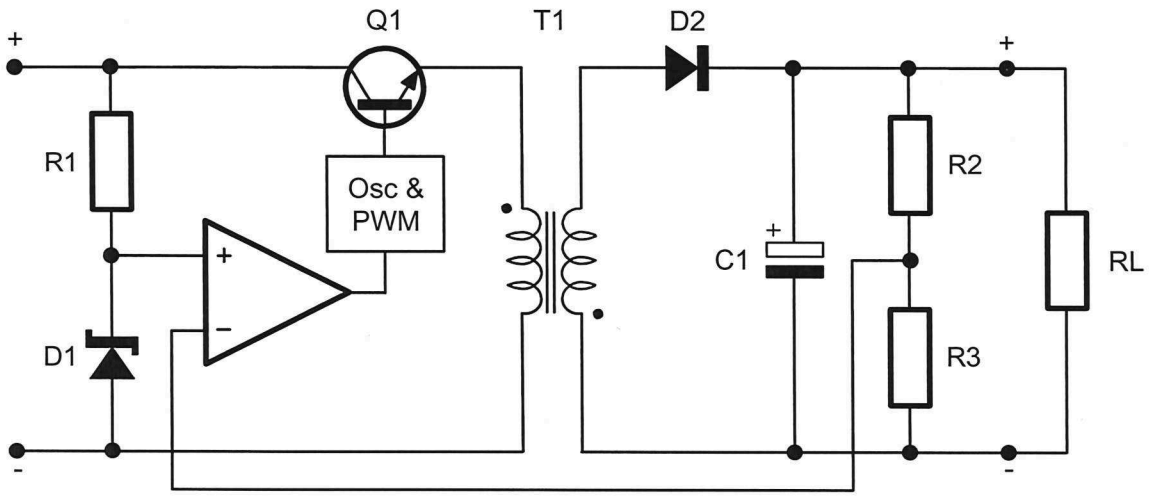

Figure 4 *The isolating DC-DC converter with closed-loop control to provide regulation*

As the circuit in Figure 4 above is drawn, although there is a transformer providing electrical isolation between the input and output circuits, it is undermined by the electrical path from output to input via the feedback network (the error amplifier). As a consequence, an electrical failure in the feedback network can allow a path between the circuit's two halves. This issue is revisited when discussing switched mode power supplies in Section 8.

 Copyright: Not to be reproduced without permission

Practise calculating the output voltage of regulated DC-DC converters by trying the following questions.

1. Calculate the output voltage of the circuit in Figure 5 below.

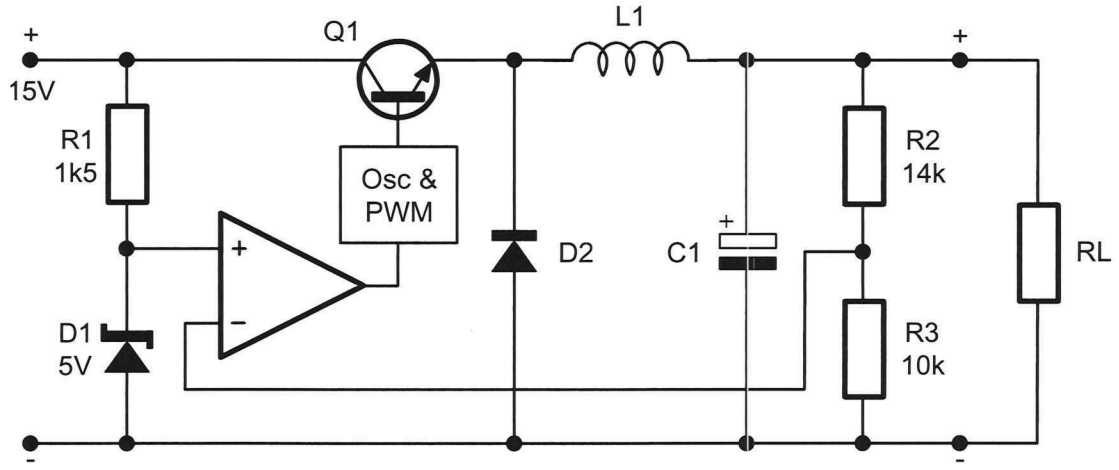

Figure 5

2. Calculate the output voltage of the circuit in Figure 6 below.

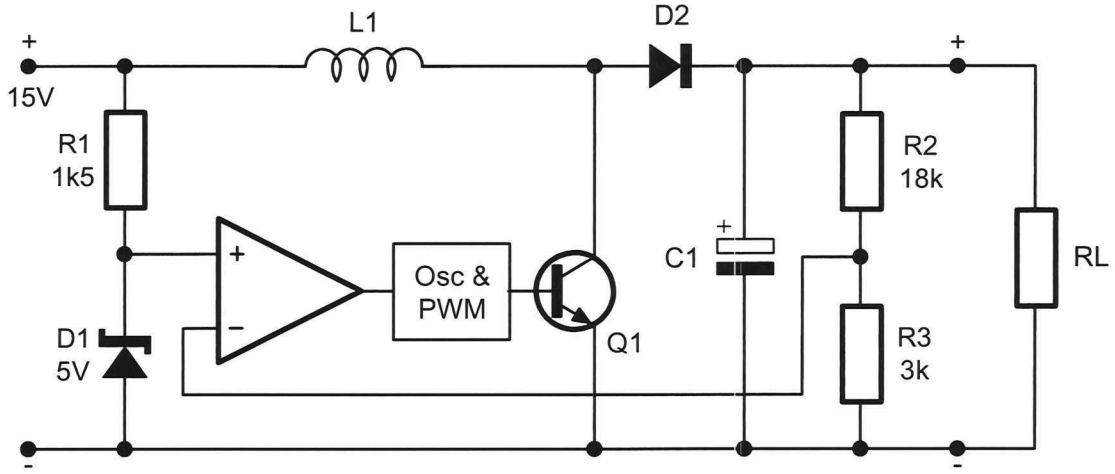

Figure 6

3. Calculate the output voltage of the circuit in Figure 7 below.

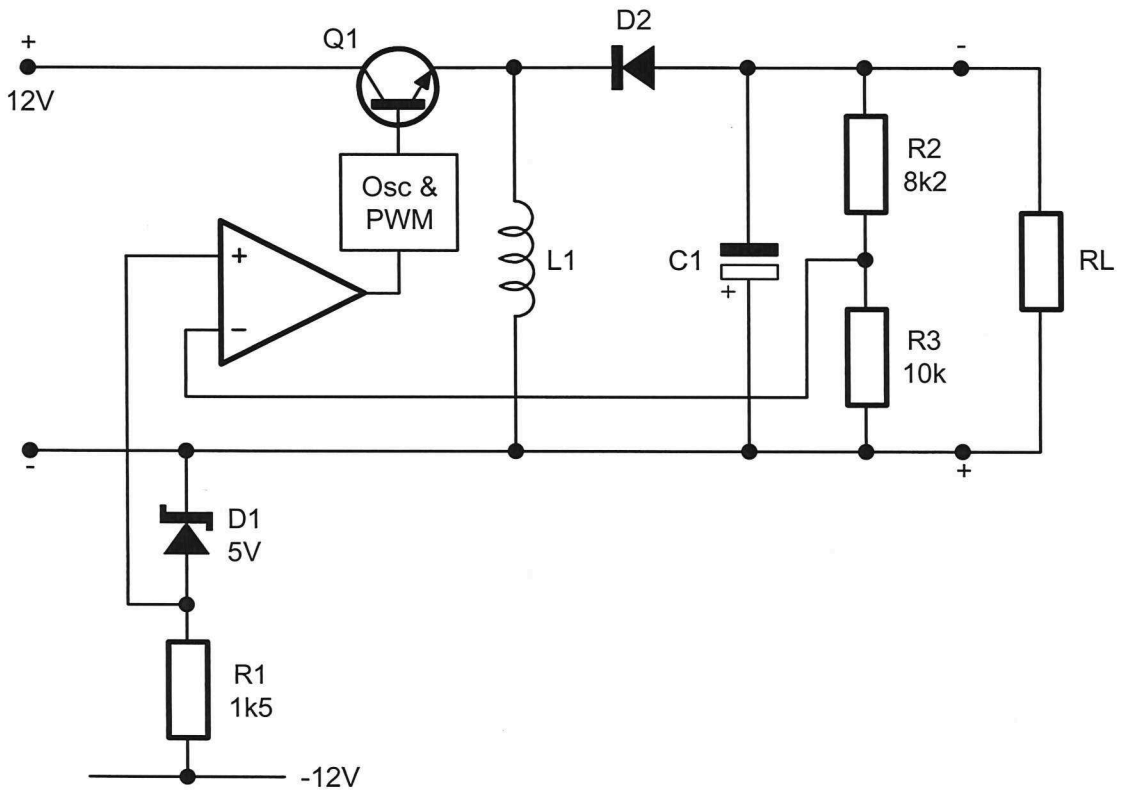

Figure 7

 Copyright: Not to be reproduced without permission

Regulated DC-DC converters with an adjustable output

Recall that to make the output voltage of series regulators with error amplification adjustable, the ratio of the resistors in the sampling network is made variable. As DC-DC converters also use error amplification to set and regulate the output voltage, the same method can be used to make their output voltage variable. This can be implemented in one of two ways as shown in Figures 8 and 9 below using step-down configuration.

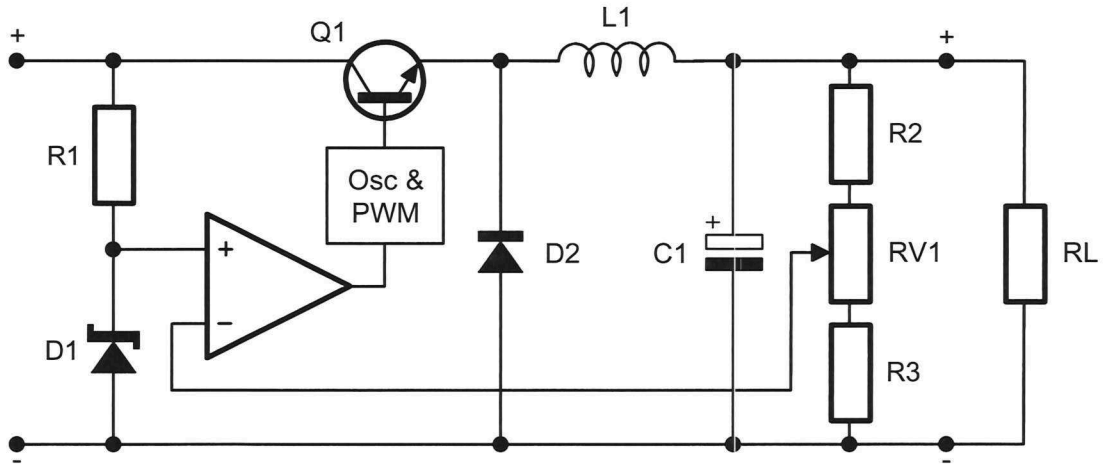

Figure 8 *One method of implementing a regulated step-down DC-DC converter with an adjustable output*

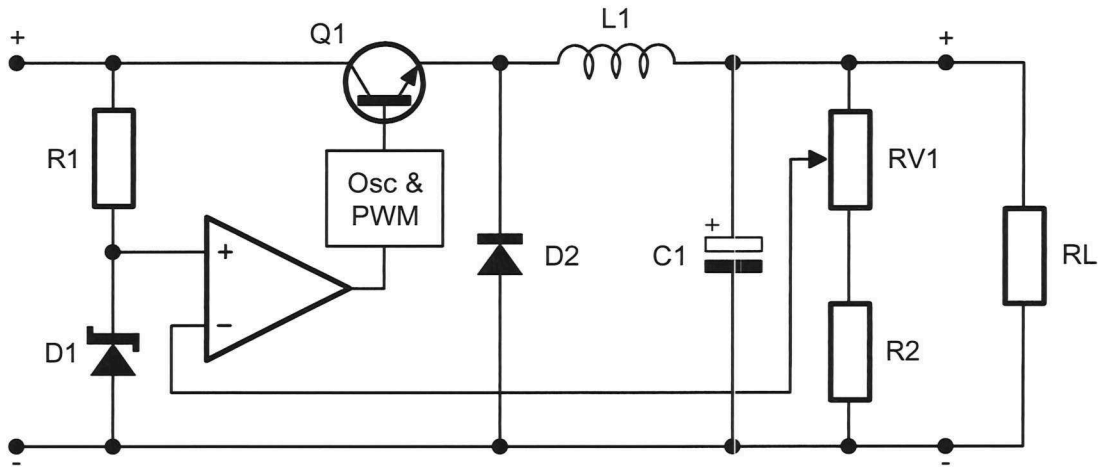

Figure 9 *Another method of implementing a step-down DC-DC converter with an adjustable output*

Importantly, the method of making the output voltage variable in Figure 9 cannot be used for step-up DC-DC converters. This is because the theoretical minimum output voltage is equal to the reference voltage which is lower than the DC unregulated output voltage and cannot be supported by the step-up configuration.

The pulse width modulator (PWM)

As mentioned earlier, control over the switching transistor's on and off time is achieved by adjusting the pulse train's duty cycle (or, less often, it's duty cycle and frequency). This is done using a pulse width modulator (PWM) which can be implemented in a number of ways.

Although the operation of a PWM circuit is not tested in this unit, a simple example is shown in Figure 10 below.

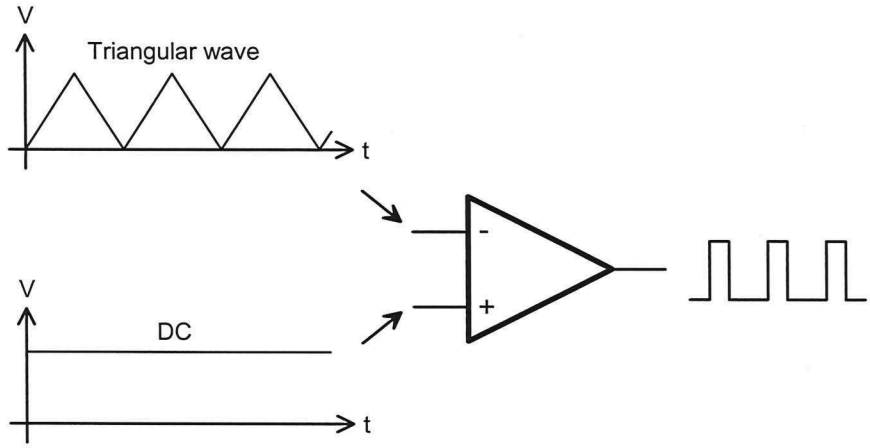

Figure 10 *The pulse width modulator*

At first glance, the circuit is just an op amp operated as a comparator. However, the unipolar triangular wave on the comparator's inverting input is critical to the PWM's operation.

Recall that the operation of a comparator can be summarised as shown in Table 1 below.

Table 1	**Output voltage**	
Input conditions	**Dual rail op amp**	**Single rail op amp**
$V_{non\text{-}inverting} > V_{inverting}$	+Vcc ("high")	+Vcc ("high")
$V_{non\text{-}inverting} < V_{inverting}$	-Vcc ("low")	0V ("low")

 Copyright: Not to be reproduced without permission

From this table we can determine that whenever the triangular wave's instantaneous voltage is less than the DC voltage on the comparator's non-inverting input, its output is high. And, whenever the triangular wave's instantaneous voltage is more than the DC voltage, the comparator's output is low. This is shown in Figure 11 below.

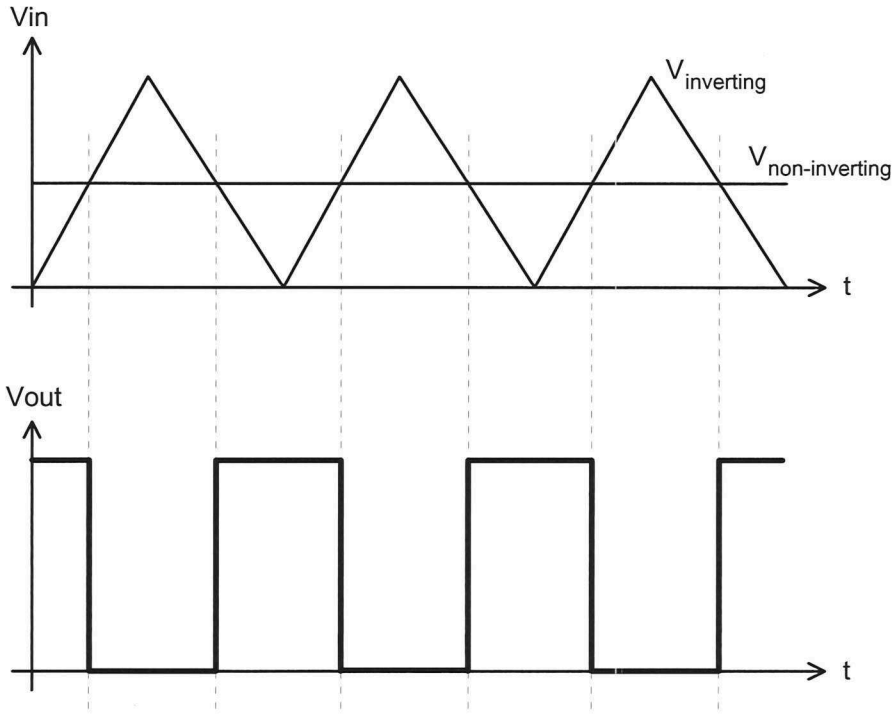

Figure 11 *The inputs and output of a op amp comparator (single rail) operated as a PWM*

Importantly, as Figure 12 below shows, the DC voltage on the op amp's inverting input determines the pulse train's duty cycle.

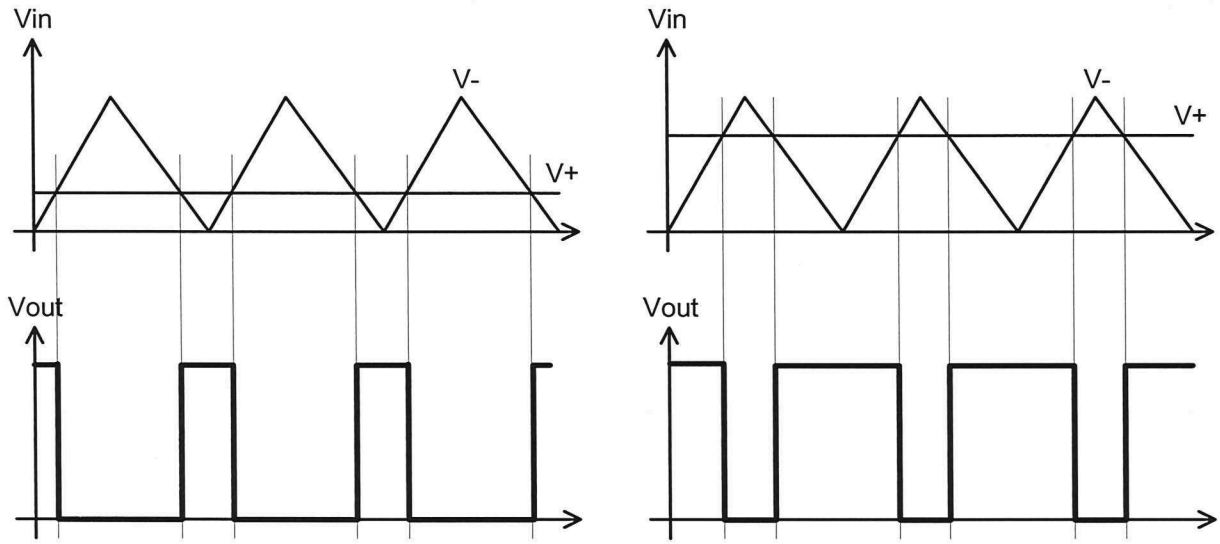

Figure 12 *The duty cycle of the pulse train on the op amp's output is affected by the DC voltage on the op amp's inverting input*

Incorporating this PWM into the circuit of the step-down configuration (though any of the switching regulators could have been used) gives us Figure 13 below.

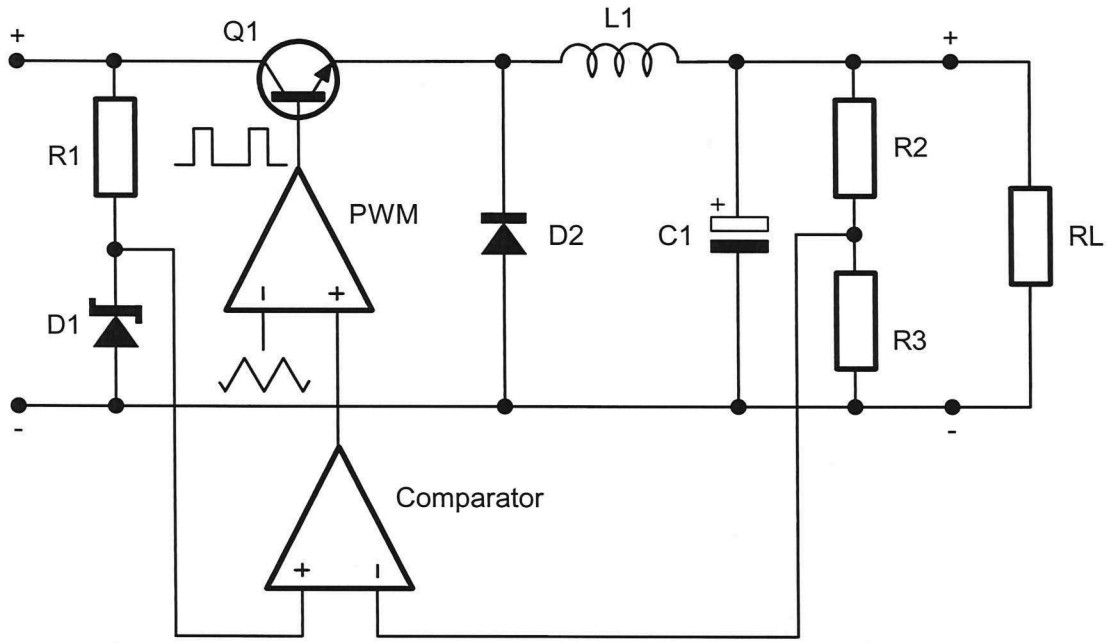

Figure 13 *The step-down configuration with PWM to regulate the output voltage*

 Copyright: Not to be reproduced without permission

Now, when the load resistance in the circuit drops, the DC-DC converter's output initially wants to drop as well. The effect of this is felt around the circuit as follows:

- the sample voltage and therefore the voltage on the comparator's inverting input drops
- the potential difference between the comparator's inputs gets bigger (and more positive)
- the comparator's DC output voltage (the error signal) gets bigger
- the duty cycle out of the PWM gets bigger
- more energy is delivered to the load during both the on and off times of the transistor
- the output voltage goes back up to the correct level

The reverse is also true. If the load resistance goes up, the DC-DC converter's output initially wants to go up as well. This means that:

- the sample voltage and therefore the voltage on the comparator's inverting input goes up
- the potential difference between the comparator's inputs gets smaller (and less positive)
- the comparator's DC output voltage (the error signal) gets smaller
- the duty cycle out of the PWM gets smaller
- less energy is delivered to the load during both the on and off times of the transistor
- the output voltage drops back down to the correct level

DC-DC converter ICs

ICs have been designed that implement the core functions of DC-DC converters which means that only a small number of additional components are needed. These ICs can provide very good levels of load and line regulation. To give you a feel for these ICs the following notes discusses one of them by way of example, the MC34063.

The MC34063

The MC34063 is available in an 8-pin DIL/SOIC package and can be used to readily implement the step-down, step-up and inverting configurations. The device's internal functional block diagram is shown in Figure 14 below. The IC's pin numbers are shown in brackets.

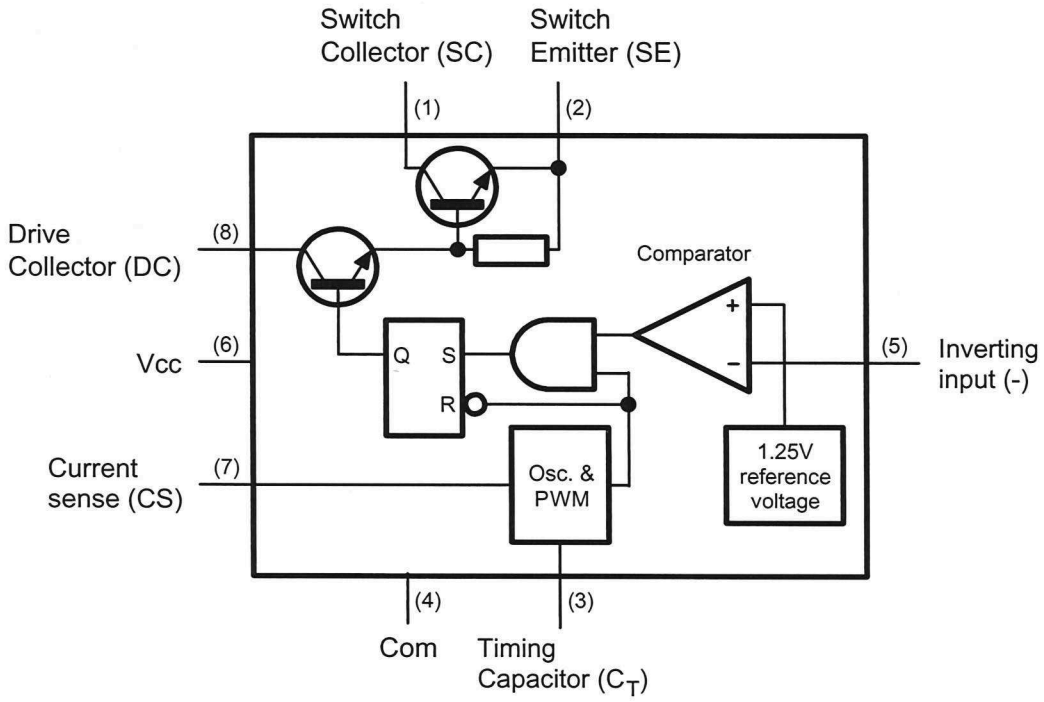

Figure 14 *Internal functional block diagram (and pin numbers) for the MC34063*

From this diagram you should be able to see that the MC34063 contains the switching transistor, reference voltage circuit, comparator and oscillator/PWM needed for the complete DC-DC converter. The reference voltage circuit is temperature compensated making the reference voltage more stable which in turn provides for better line regulation.

 Copyright: Not to be reproduced without permission

The IC also contains an extra pin that can be used for current limiting. Sensing the current and setting the current limit level is handled using a series resistor in the same way as series regulators. However, actually reducing the load current is managed differently. Without going into detail, when the load current exceeds the current limit level (typically around 1A when using the appropriate value for *R1* specified in the IC's datasheet), the additional circuitry in the Oscillator & PWM reduces the duty cycle of the pulse train that drives the switching transistor limit the current through the switching transistor.

Some important device specifications include:

- Maximum switching current: 1.5A
- Maximum input voltage: 40V
- Maximum internal power dissipation (DIL package): 1.25W
- Switching frequency (externally set using a capacitor): 100Hz to 100kHz

Figure 15 below shows the MC34063 used to implement a step-down configuration with a fixed output voltage. Notice that only seven externally connected components are needed.

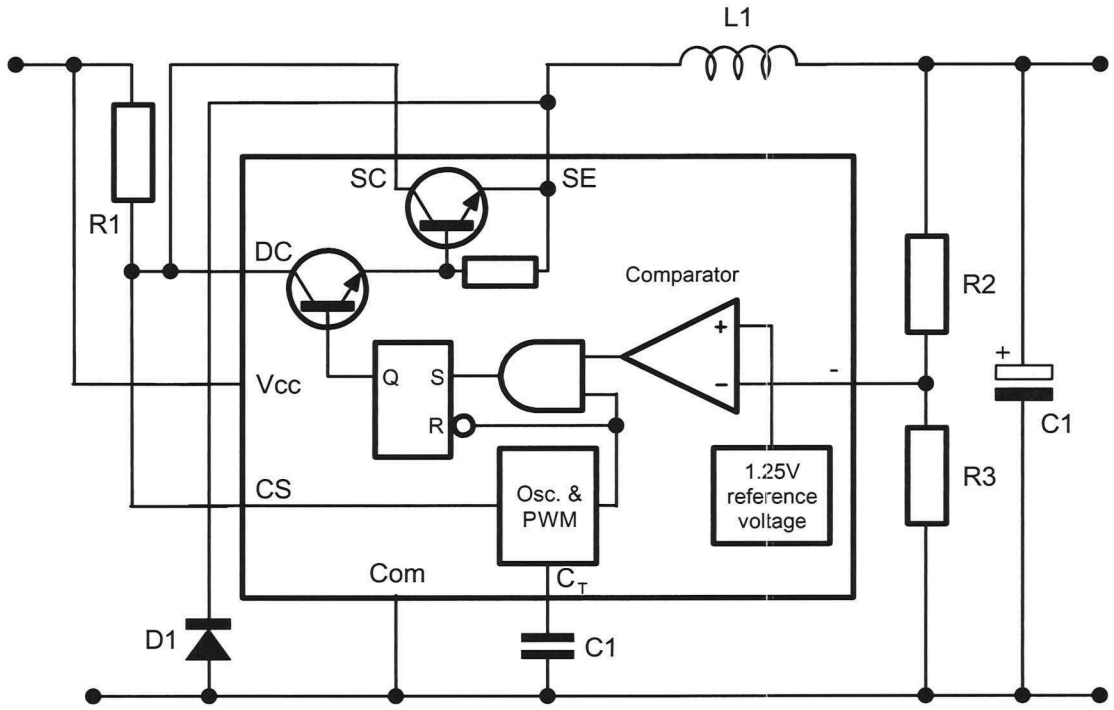

Figure 15 *The MC34063 wired with the necessary additional components to implement the step-down configuration*

Can you work out what the equation for calculating its output voltage is?

Fault-finding regulated DC-DC converter circuits implemented using an IC

As it's much more likely that the DC-DC converters that you'll encounter will be implemented using an IC like the MC34063 we'll not look at fault-finding discrete component DC-DC converter circuits here. Moreover, time won't allow us to consider the effects of the likely faults in all four configurations. So, only a procedure for fault-finding the step-down configuration in Figure 16 below is discussed next to give you an idea about how to go about it. That said, the assessments may ask you to identify faults in one of the other configurations.

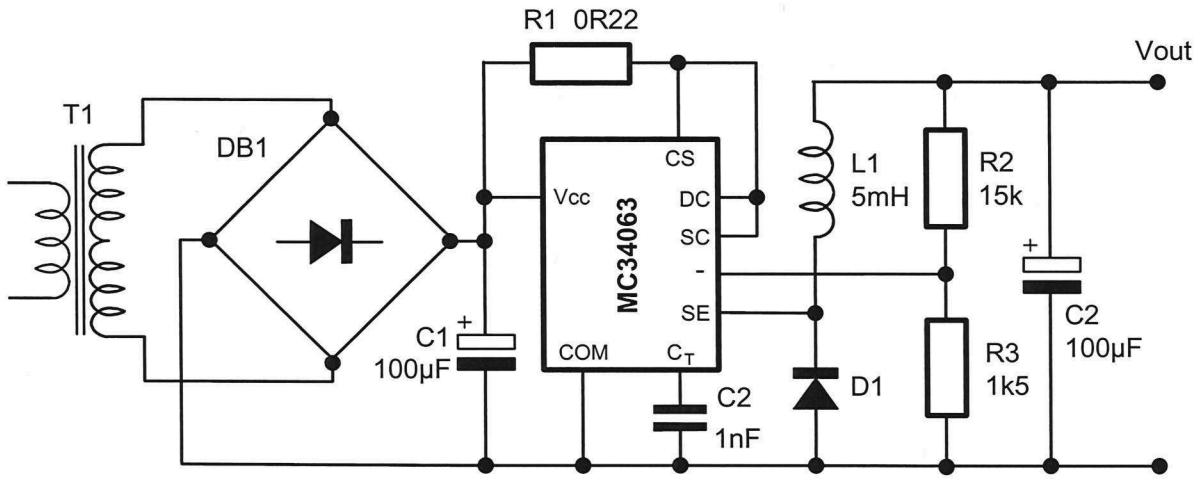

Figure 16

The objective of the fault-finding technique for this circuit is a little different to fault-finding discrete component circuits. That's because you really only want to know whether its the IC that's faulty or one of the external components. Determining exactly which of the elements inside the IC is faulty is academic because you can't replace them anyway.

Important note:
As you read through the following notes, think about the fault symptom being discussed and why the suggested faults would cause it. At this point in the subject, you should have a reasonably good idea. If not, you know that there are some gaps in your understanding of the operation of the step-down configuration and/or how closed-loop control works to set the output voltage and regulate it.

 Copyright: Not to be reproduced without permission

Step 1 - Check the converter's output voltage

If the output voltage is fairly close to the value that it should be then the circuit is probably working correctly as a regulator. For confirmation, you can jump straight to Step 5. (That said, remember that you should measure *Vout* under both light and heavy load conditions.)

Problems that you would be looking for include:

- The output voltage has gone up substantially.

  This would indicate that either: *R2* has gone very high or open-circuit; or there is a problem internal to the IC which would include (but is not limited to) a short-circuit across the IC's switching transistor. To help decide which of these faults is causing the problem, go to Step 2.

- The output voltage has gone up a little.

  This would indicate that *R2* has drifted a little high so remove it and check its resistance.

- The output voltage has dropped to 0V.

  This would indicate that either: there is a problem with the unregulated DC voltage; there is a problem internal to the IC which would include (but is not limited to) an open-circuit on the IC's switching transistor; *R1* is open-circuit; or a track or solder joint in the series path from the unregulated power supply portion of the circuit to the load has gone open. To help decide which of these faults is causing the problem, go to Step 2.

- The output voltage has dropped to be the same voltage as the IC's reference voltage.

  This would indicate that *R3* has gone very high or open-circuit so remove it and check its resistance.

- The output voltage has dropped a little or a lot, but is not 0V. In this case you would use a CRO to look at the regulator's output voltage.

  If there is a ripple superimposed on the DC output voltage at the same frequency as the pulse train, *C1* is possibly leaky or open so remove it and check it with an LCR meter.

  If there's a DC voltage with only a very small high frequency ripple, or none at all, *R3* has possibly drifted a little high so remove it and check its resistance.

  If the output voltage resembles a pulse train, it's a sure sign that the energy recovery circuit is malfunctioning in some way. Either *D1* is open-circuit or, less likely, the inductor has shorted turns. (The inductor having shorted turns is a fairly unlikely fault if it's a power inductor or a loosely wound toriadal inductor.)

Step 2 - Check the unregulated DC voltage on the IC's *Vcc* pin

If this voltage is about right then go to Step 3 **unless** the output is exactly the same voltage (within ten or so millivolts) which would indicate that there's a short-circuit across the IC's switching transistor and so the IC needs replacing.

Other problems that you would be looking for include:

- The unregulated DC voltage is 0V.

  This would indicate that there has likely been a catastrophic failure in the unregulated power supply portion of the circuit. This would include: the mains fuse has blown; a winding on the transformer is open-circuit; or two or more diodes are open-circuit.

- The unregulated DC voltage has decreased but not to 0V then there are two possibilities:

  If this voltage has dropped by up to about 20% (this figure is a guide only), it's possible that, being unregulated, this voltage has gone down due to the loading caused by the fault. Keep this in mind as you on go to Step 3.

  If this voltage has dropped by more than about 20% (again, this figure is a guide only), it would indicate that there's a fault in the unregulated power supply portion of the circuit. So, investigate this before going to Step 3. Look at the unregulated DC voltage using a CRO to see whether there is more ripple than there should be and/or whether its frequency has changed. Then, draw on your knowledge of unregulated power supplies to identify the faulty component.

Step 3 - Check the DC voltage on the IC's *DC* and *SC* pins

These voltages should be the same as each other and, for light load conditions, a value close to the unregulated DC voltage.

Problems that you would be looking for include:

- The voltage on these pins are both 0V.

  This would indicate that either *R1* is possibly open-circuit or there's a cracked PCB track, dry joint, etc in one of the connections to/from it.

- The voltage on these pins are 0.1V or more below the unregulated DC voltage.

  This would indicate that either *R1* has possibly gone a little high or the fault is causing the IC or some other component in the regulator to draw a sizeable current.

 Copyright: Not to be reproduced without permission

Step 4 - Check the DC voltage on the IC's *SE* pin

This should be a waveform should resemble a pulse train and have the same frequency as the circuit's switching frequency. That said, it'll not have the shape of a perfect pulse train - What's going on a this point of the circuit is quite complicated.

Problems that you would be looking for include:

- The voltage on this pin is 0V

  This would indicate that there's possibly an open-circuit base or emitter on the IC's switching transistor or perhaps the transistor's drive is no-longer a pulse train and stuck low instead. Either way, the IC needs replacing.

- The voltage on this pin is a value approaching the unregulated DC voltage which would indicate that there's one of two possibilities:

  The first is that *R2* is very high or open-circuit (as suspicion would have developed by now). The other is that the transistor's drive is no-longer a pulse train and stuck high instead in which case the IC needs replacing.

Step 5 - Check the DC voltage on the IC's "-" pin

This should be a DC voltage that is equal to the reference voltage inside the IC. If it is, then the loop is closed. In the absence of other fault symptoms, a correct voltage on this pin would confirm that the circuit is working correctly.

Can the circuit be faulty if the voltage on this pin is right? Yes. Problems include *R3* having gone high or open and *R2* having gone high.

On a final note, a fault not discussed above is *R1* having gone short-circuit which is a realistic fault condition if it is a wire-wound resistor. This fault hasn't been discussed above because it would only affect the voltage at one junction in the circuit and the change in voltage would be small and easily missed. For this fault, the regulator would work perfectly, however the current-limiting feature would be deactivated.

Student notes

Copyright: Not to be reproduced without permission

Skill practice 7

Practise measuring output voltage and load current for a DC-DC converter with closed-loop control implemented using the MC34063 IC

This exercise is practise for the sorts of skills you may be required to perform in a practical test. Remember, in any practical tests you will be working alone so make sure that you can perform all the steps. It should take you about 1¼ hours to complete this exercise.

Equipment

- prototyping panel
- 15V AC power supply
- decade box
- two DMM
- MC34063
- 8.2mH 0.3A power inductor
- 1N5819 diode (Schottky)
- 0.22Ω 1W resistor
- 180Ω ¼W resistor
- 1k5Ω ¼W resistor
- 15kΩ ¼W resistor
- 47kΩ ¼W resistor
- 100Ω 5W resistor
- 1nF capacitor
- 100µF 63V electrolytic capacitor
- banana leads
- hook-up wire
- wire strippers

Remember:

Follow TAFE NSW WHS guidance at all times!

 Copyright: Not to be reproduced without permission

Work tasks

1. Read your WHS responsibilities at the top of the form below. Then conduct a WHS risk assessment and record your findings in the space provided.

Responsibilities of students under the Model WHS Act: s28

- Take reasonable care for your own health and safety by working safely at all times
- Take reasonable care to ensure that your acts or omissions don't put the health and safety of others at risk
- Follow all TAFE NSW WHS guidance and comply with all reasonable instructions from TAFE NSW staff to assist them in complying with the TAFE NSW WHS requirements
- In addition to the above, you must:
  - use and maintain machinery, tools and all other equipment properly and safely
  - ensure that your work area is free of hazards
  - notify a TAFE NSW staff member of actual or potential hazards
  - wear/use prescribed safety equipment
  - take notice of any safety signs and adhere to their instructions

Risks involved in this activity include:	**Control measures:**
Trip hazards (eg students bags) Objects dropped on feet (while equipment is taken to and from workbenches).	Move bags and other objects from walkways Plan lifting of equipment
Others: _____	Other: _____
_____	_____
_____	_____

My signature here indicates that I have read and understand my responsibilities under the Model WHS Act s28 (detailed above). I have also conducted a risk assessment before undertaking this activity and have identified measures to control these risks and have implemented them.

Signature: _____ Date: _____

2. Gather the equipment needed for this exercise.

3. Wire the circuit of Figure 1 on the prototyping panel.

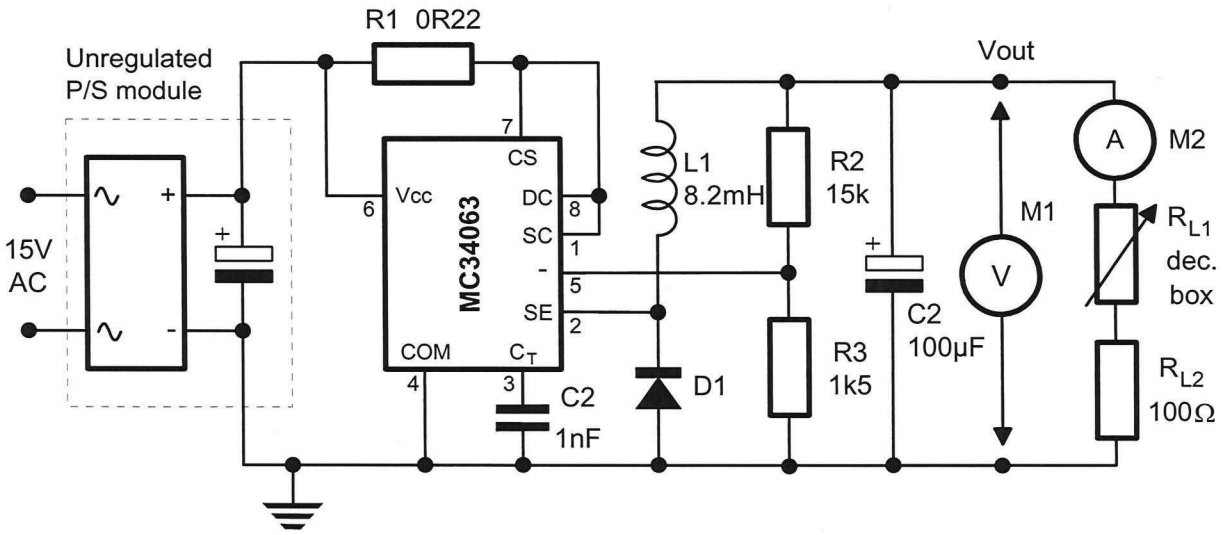

Figure 1

Question 1
Calculate the circuit's theoretical output voltage.

4. Set the decade box's resistance for 2.4kΩ then turn on the AC power supply.

Self check: If your circuit is working correctly, you should measure an output voltage (on M1) that should be reasonably close to your calculated value and a load current of about 5.5mA (on M2). If you don't measure these values then turn off the AC power supply immediately and check your wiring.

 Copyright: Not to be reproduced without permission

5. Disconnect the load from the circuit by disconnecting one of the wires to the decade box.

6. Measure the unloaded output voltage. Record your measurement in the first row of Table 1 (on the next page).

Question 2
Why is there a small difference between the measured and calculated output voltages?

_____

_____

7. Measure the circuit's DC unregulated input voltage. There's no need to record this measurement.

Question 3
Which switching regulator is the circuit implementing given the difference between the input and output voltages?

_____

Question 4
How does the connection of the diode in the circuit support your answer to Question 3?

_____

_____

8. Reconnect the decade box and adjust it's resistance until the load current is 10mA.

9. Measure and record the new output voltage.

10. Readjust the decade box to obtain the load currents listed in Table 1 and repeat Step 9 for each.

11. Once the table is full, disconnect the load.

Table 1

Load current	Output voltage	Load current	Output voltage
No load		70mA	
10mA		80mA	
20mA		90mA	
30mA		100mA	
40mA		110mA	
50mA		120mA	
60mA		130mA	

12. Draw a graph of load current versus load voltage on the graph below.

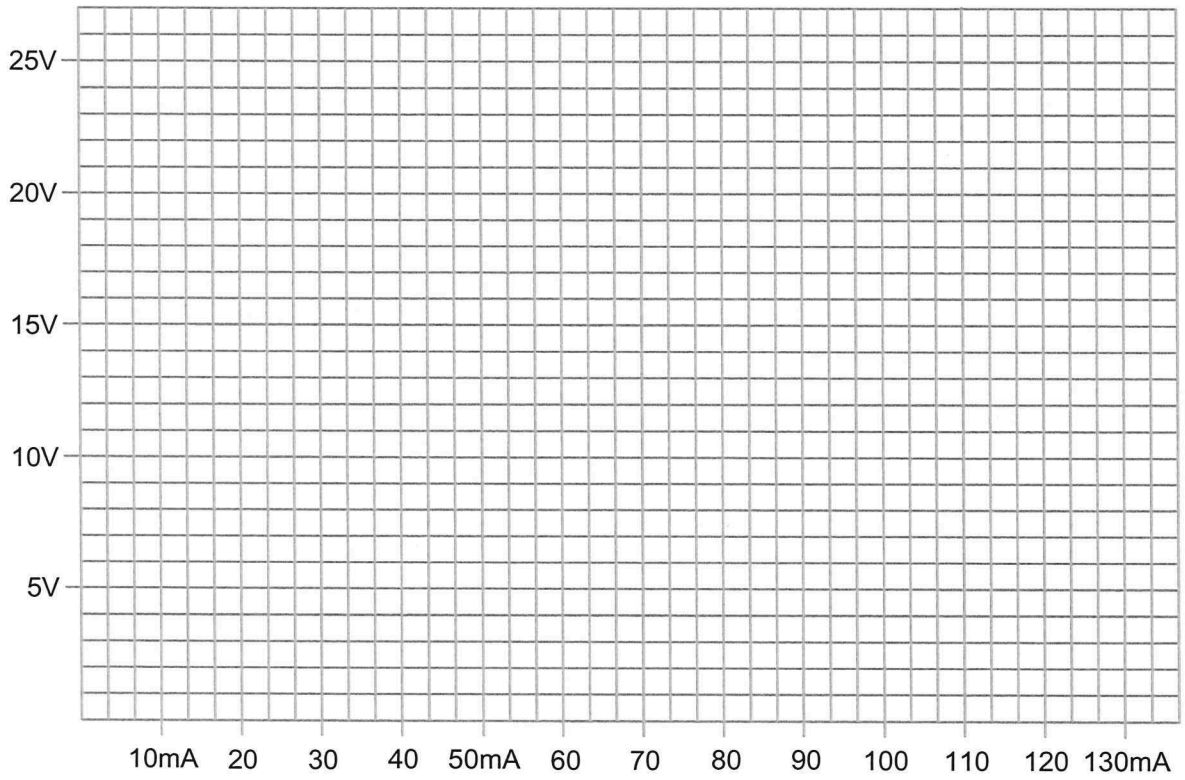

 Copyright: Not to be reproduced without permission

13. Calculate the circuit's load regulation percentage for the 40mA load current. Record this figure in Table 2 below.

14. Repeat Step 13 for the other load currents listed in the table.

Table 2

Load current	Load regulation %
40mA	
60mA	
80mA	
100mA	

Question 5
How does this regulator's load regulation compare with the regulation performance of linear regulators? (Note: Look at the load regulation figures that you obtained on page 1-23). Discuss the similarities and differences.

15. Measure the voltage (with respect to common) on the comparator's inverting input (pin-5 of the IC). There's no need to record this measurement.

Question 6
Explain how this voltage proves that the op amp inside the IC has negative feedback.

The teacher needs to check your work at this point...

16. Disconnect everything connected to the DC, SC, - and SE pins of the IC in your current circuit.

17. Rewire the IC's pins as shown in Figure 2 below.

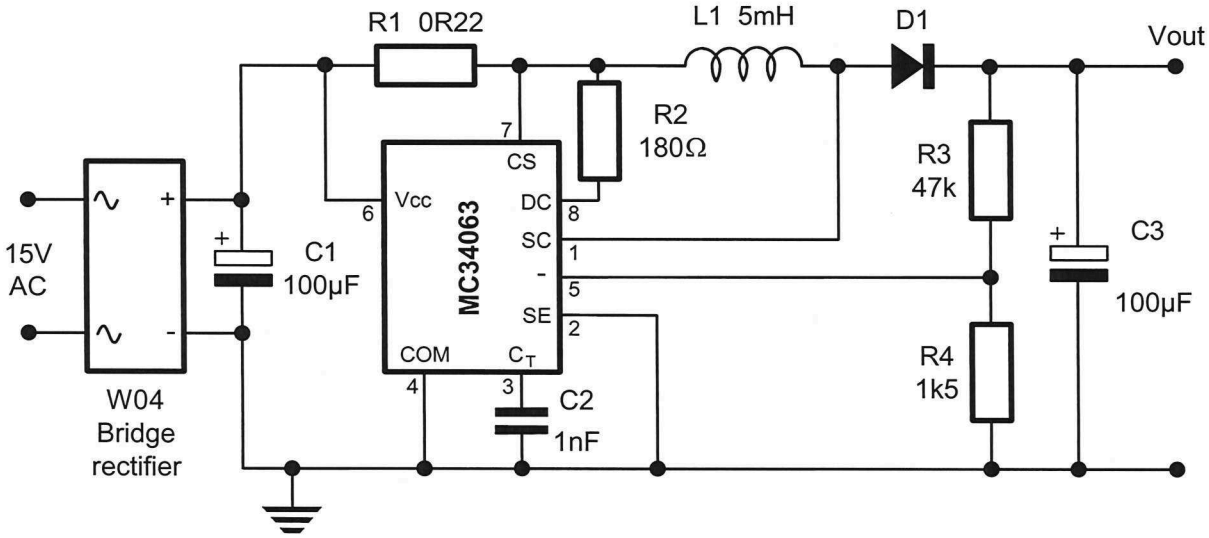

Figure 2

18. Connect a 2kΩ load to the circuit using the decade box.

Note: There's no need to use the 100Ω resistor in series with the decade box to set up the load like you did for the first circuit.

 Copyright: Not to be reproduced without permission

19. Calculate the circuit's theoretical output voltage. Record your answer in Table 2 below.

20. Measure and record the circuit's output voltage.

Table 2

Theoretical output voltage	Measured output voltage

Question 7
Which switching regulator is the circuit implementing? **Tip:** If you're not sure, measure the circuit's DC unregulated input voltage.

_____

Question 8
Why is there a small difference between the measured and calculated output voltages?

_____

_____

Question 9
What should the voltage on the comparator's inverting input (pin-5) be with respect to common?

_____

_____

21. Measure the voltage on the comparator's inverting input to check your answer to Question 9.

The teacher needs to check your work at this point...

Review questions

Answer these questions to check your understanding of what you have learnt for this chapter. Doing this will also help to prepare you for the tests.

1. Draw the generic block diagram for DC-DC converters with closed-loop control.

Questions 2 to 10 refer to the circuit in Figure 1 below

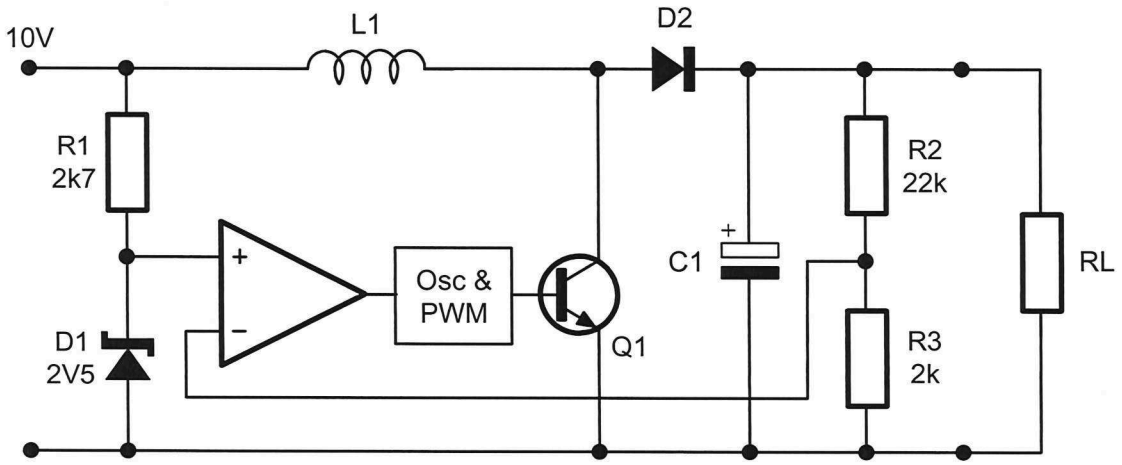

Figure 1

2. What DC-DC converter configuration is this circuit?

_____

 Copyright: Not to be reproduced without permission

3. Calculate the circuit's output voltage.

4. What kind of voltage would you expect to see on the collector of *Q1*?

- ☐ A DC voltage that is 0.6V smaller than the output voltage.
- ☐ A triangular wave with peaks at 30.6V and -0.6V.
- ☐ A DC voltage that is 0.6V bigger than the output voltage.
- ☐ A squarewave with peaks at 30.6V and about 0.2V.

5. What type of device is *D1* likely to be? Explain your answer.

6. What aspect of the circuit's performance does using a bandgap reference diode improve?

7. What would you expect to happen to the circuit's output voltage if *D2* went open-circuit? Explain your answer.

8. What would you expect to happen to the circuit's output voltage if the base of *Q1* went open-circuit? Explain your answer.

9. What would you expect to happen to the circuit's output voltage if *D1* went short-circuit? Explain your answer.

10. What would you expect to happen to the circuit's output voltage if the input voltage increased by 50%? Explain your answer.

Questions 11 to 19 refer to the circuit in Figure 2 below

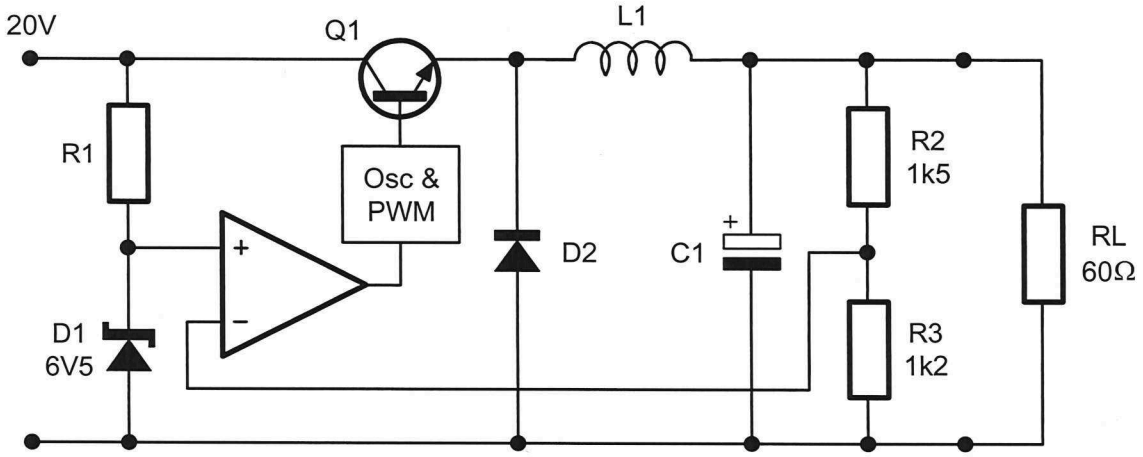

Figure 2

11. What switching regulator configuration is this circuit?

 Copyright: Not to be reproduced without permission

12. Calculate the circuit's output voltage.

13. What kind of voltage would you expect to see on the emitter of *Q1*?

- ☐ A DC voltage that is 0.6V smaller than the output voltage.
- ☐ A triangular wave with peaks at about 19.8V and -0.6V.
- ☐ A DC voltage that is 0.6V bigger than the output voltage.
- ☐ A squarewave with peaks at about 19.8V and -0.6V.

14. What type of device is *D1* likely to be? Explain your answer.

15. Calculate the power dissipated by the load.

16. What would you expect to happen to the circuit's output voltage if *D1* went open-circuit? Explain your answer.

17. What would you expect to happen to the circuit's output voltage if the collector-emitter of *Q1* went short-circuit? Explain your answer.

18. What would you expect to happen to the circuit's output voltage if *R3* drifted high in value? Explain your answer.

19. What would you expect to happen to the circuit's output voltage if *R1* went open-circuit? Explain your answer.

 Copyright: Not to be reproduced without permission

Questions 20 to 22 refer to the circuit in Figure 3 below

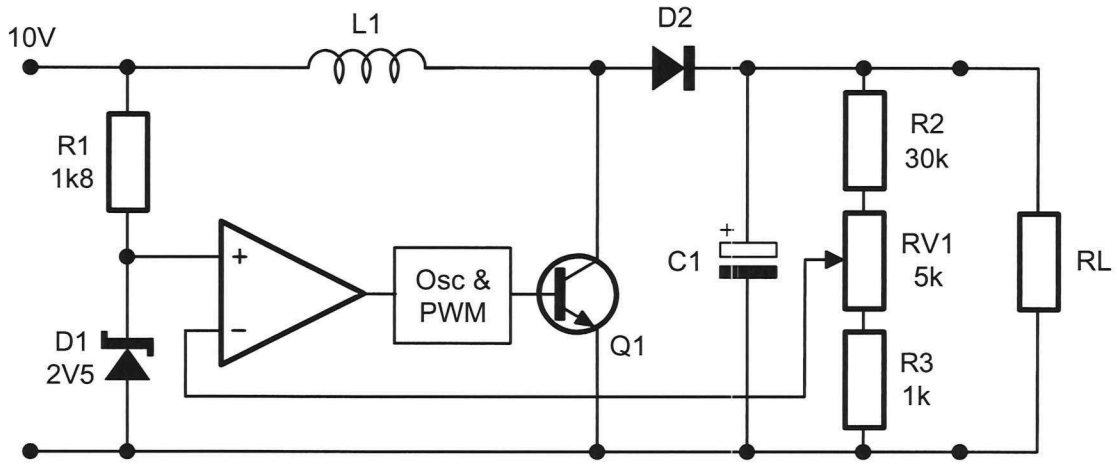

Figure 3

20. Calculate the circuit's minimum output voltage.

21. Calculate the circuit's maximum output voltage.

22. Why would a 10μF 63V capacitor be inappropriate for *C1*?

Section 8 Switched-mode power supplies

Purpose To develop your understanding of the operation of switched-mode power supplies so that you're able to trouble-shoot them effectively.

Objectives At the end of this section you should be able to:

- List the advantages and the key disadvantage of switched-mode power supplies (off-line switching regulators) over complete linear power supplies
- State a safety precaution that is necessary when repairing switched-mode power supplies
- Identify the flyback converter and forward converter SMPS circuits
- Explain the operation of the flyback converter and forward converter SMPS circuits
- Describe the function of every component in the circuit of relatively simple flyback converter and forward converter SMPS circuits
- Predict the voltages around the circuit of relatively simple flyback converter and forward converter SMPS circuits
- State the effects of typical faults in relatively simple flyback converter and forward converter SMPS circuits

 Copyright: Not to be reproduced without permission

Introduction

So far, the treatment of DC-DC converters in this workbook has concentrated on circuits that operate off an unregulated DC input voltage. The source of that unregulated DC voltage could be a battery. However, it can also be derived from mains (also often referred to as *line*) and you're likely to see this. The mains operated DC-DC converter relies almost entirely on the isolating configuration and the design is widely known as the *switched-mode power supply* (SMPS) or *off-line switching regulator*.

This chapter explains the basic operation of the SMPS. In addition, an extremely important safety issue about fault-finding SMPSs is explained. Finally, some of the safety and practical considerations that influence the design of SMPS are also discussed as this affects decisions about the suitability of substitute components (when components fail and original parts are not available readily, or at all).

The advantages and disadvantages of switching regulation

The SMPS is used by manufacturers in a wide variety of electronics equipment due to the high efficiency of switching regulation (which can approach 99%). This has the benefit of making mains operated equipment cheaper to run because there are fewer losses.

There are advantages for the manufacturer too. With fewer losses, a heatsink may not needed to dissipate the heat that the losses can generate. Or, where a heatsink is still needed, a much smaller one can be used. This provides costs savings (heatsinks are one of the more expensive electronics components) and space/weight savings (heatsinks can be bulky and heavy).

Adding to this, using the isolating DC-DC converter configuration can, with the help of high frequency switching, allow a transformer to be used for electrical isolation that is smaller, lighter and hence cheaper than the mains transformers used in linear power supplies. To give an example of how great these size savings can be, there are commercially available 1A, mains operated SMPSs that can fit inside a matchbox.

Using the isolating DC-DC converter provides the SMPS with other advantages over linear power supplies worth mentioning here too. The transformer's turns ratio can be used to step voltages down or up and even invert DC voltages.

That said, the grass isn't all green! SMPSs have a significant disadvantage that limits where they can be used. As their name implies, the circuit switches. Moreover, they do so at relatively high frequencies. And, as the switching current of most SMPSs passes through at least one inductive component, the electromagnetic radiation (EMR) that can be emitted can cause significant radio frequency interference (RFI) to nearby electronics.

The flyback converter SMPS

Recall that linear regulators are connected to mains via an unregulated power supply involving a mains transformer, rectifier and smoothing as shown in the block diagram in Figure 1 below.

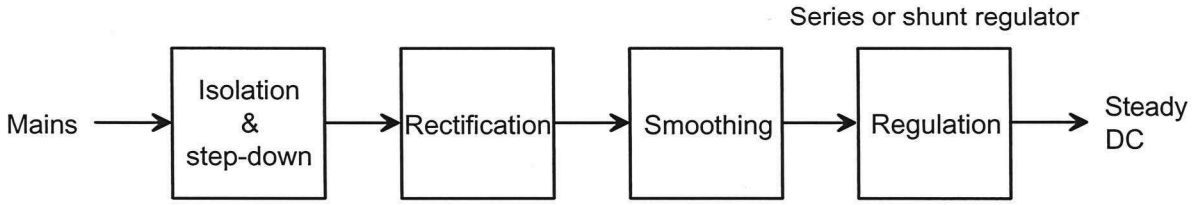

Figure 1 *The basic block diagram of a mains operated linear DC power supply*

This block diagram **could** be used to implement a SMPS too but with the necessary stepping up or down of voltage handled by the switching regulator instead of the transformer by using the appropriate configuration. This is shown in Figure 2.

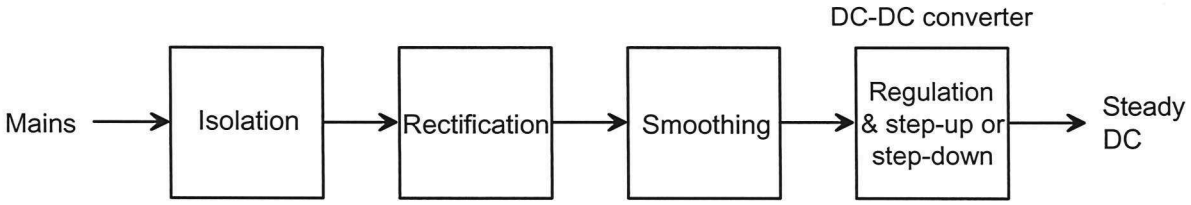

Figure 2 *The block diagram of a how a SMPS could be implemented*

But, by using the isolating configuration DC-DC converter, the mains transformer can be dispensed with altogether as shown in Figure 3 below. This allows for the use of a much smaller and cheaper transformer to provide the electrical isolation because of the higher operating frequency involved (20kHz, and higher, instead of 50Hz). This type of SMPS is known as the *flyback* converter.

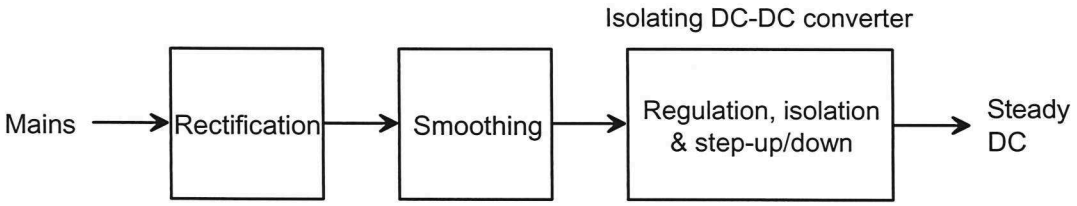

Figure 3 *The basic block diagram of the flyback converter SMPS*

 Copyright: Not to be reproduced without permission

Figure 4 below shows the basic circuit of a flyback SMPS.

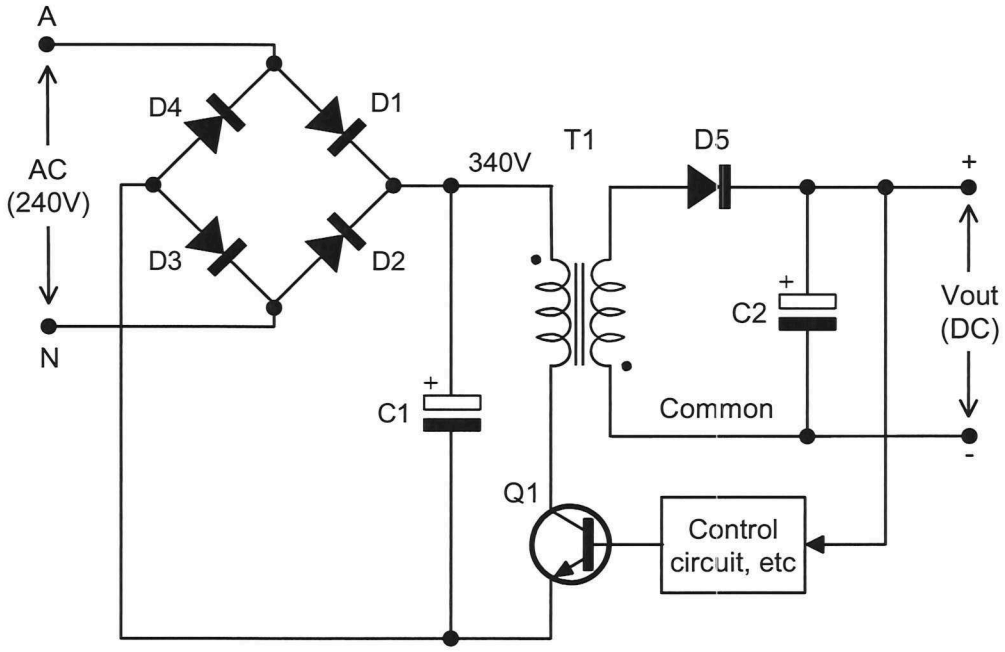

Figure 4 *The flyback converter SMPS*

The bridge rectifier (diodes *D1* to *D4*) and the filter capacitor (*C1*) convert the mains to unregulated DC at about 340V. (The exact value can be calculated by subtracting 1.2V from the peak value of mains. But, as mains is unregulated, the voltage will vary anyway so 340V is as good as any other number to use.) The rest of the circuit's operation is identical to the operation of the isolating switching regulator described in Section 6 and so is not repeated here (don't been fooled by the change in the position of *Q1* - the circuits are identical). As the transformer can step voltages up or down, the circuit can be designed to give a regulated DC output voltage that is the same as, smaller or bigger than the unregulated DC voltage.

The reference to this SMPS being a "flyback" converter relates to the fact that the circuit doesn't transfer energy from the unregulated DC power supply to the load at the same time as the transformer is energised. (Recall that the transformer implements the energy recovery block and is designed to store energy using a gap-core.)

The forward converter SMPS

An alternative to the flyback converter is the forward converter SMPS. The block diagram of the forward converter is shown in Figure 5 below.

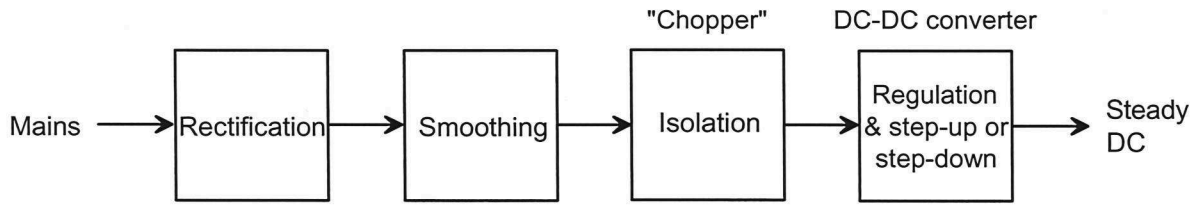

Figure 5 *The basic block diagram of the forward converter SMPS*

In this arrangement, isolation is provided by a transformer that "chops" the unregulated DC connected to its primary to produce a pulsating DC on its secondary that has the same frequency as the switching transistor's drive signal and is a similar shape. (Transformers don't work with DC but the combination of the DC chopping rate and the primary's inductance and resistance mean that an AC waveform is produced on its secondary provided the switching doesn't allow the mark or space to rest for longer than five times the primary's time constant.)

Importantly, the transformer is not part of the energy recovery circuit (like it is with the flyback converter) and so is not used to store energy. In this regard, it operates more like a standard mains transformer (though smaller because of the frequency at which it operates). Energy recovery can be implemented using one DC-DC converters discussed in Section 6, stepping the voltage down, up, or inverting it as required by the load. That said, the transformer can be used to step-voltages down or up too.

 Copyright: Not to be reproduced without permission

Figure 6 below shows the basic circuit of a forward converter implemented using a step-down DC-DC converter. Notice that the orientation of the transformer's windings (denoted using dot convention) is different to that of the transformer in the isolating configuration used for the flyback converter SMPS. This is important to the circuit's operation as you will see.

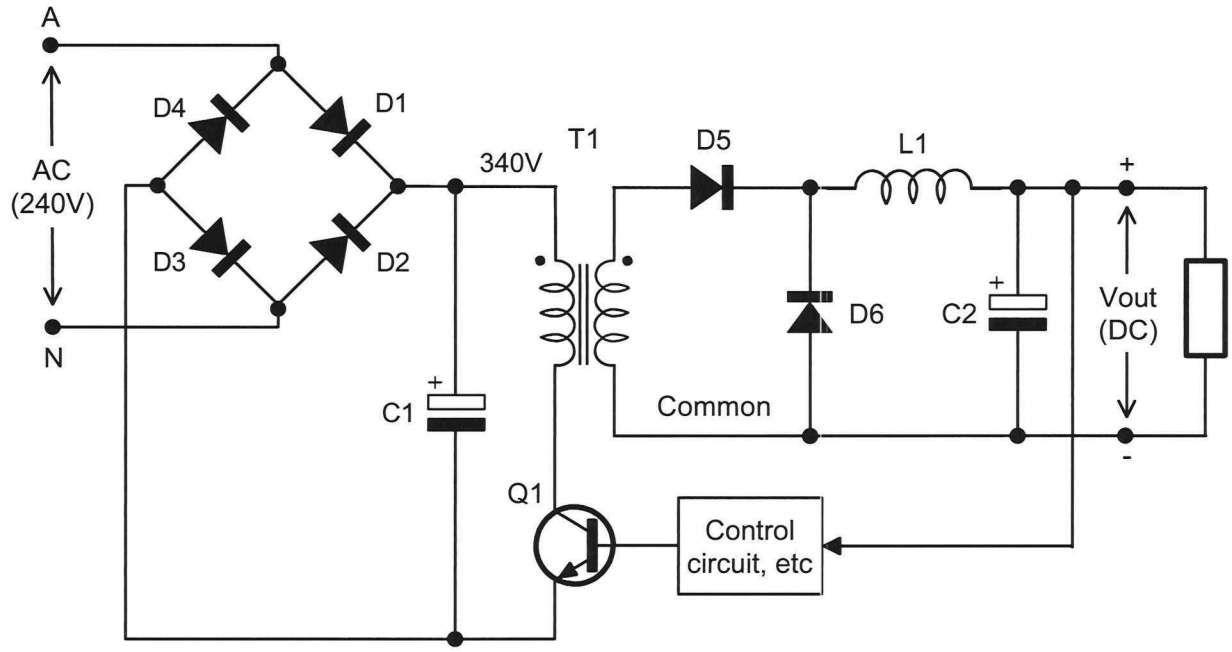

Figure 6 *The forward converter SMPS*

Like the flyback converter shown on page 8-4, the bridge rectifier (diodes *D1* to *D4*) and the filter capacitor (*C1*) convert the mains to unregulated DC at about 340V. As the transformer is not designed to store energy, it transfers nearly all of its energy to the secondary (like mains transformers are designed to do).

In this circuit, *D5* is not part of the energy recovery circuit. Instead, it implements half-wave rectification to return the AC on the transformer's secondary to DC. Full-wave rectification can be used for this purpose too.

The energy recovery circuit of the step-down DC-DC converter is implemented by *D6*, *L1* and *C2*.

As the pulse train out of the control circuitry turns the switching transistor either on or off, the circuit's operation is explained in terms of what happens during these two times.

Q1 on

During the pulse train's mark time, the transistor turns on and current flows through the primary. For the time that it takes the primary current to reach maximum (remember, this wouldn't be instantaneous), current is induced into the secondary circuit flowing through *D5* and *L1* to the load. The currents around the circuit during this time are shown in Figure 7 below. As an aside, notice that this circuit transfers energy from the unregulated DC power supply to the load at the same time as the inductor is energised and this is what defines it as a forward converter.

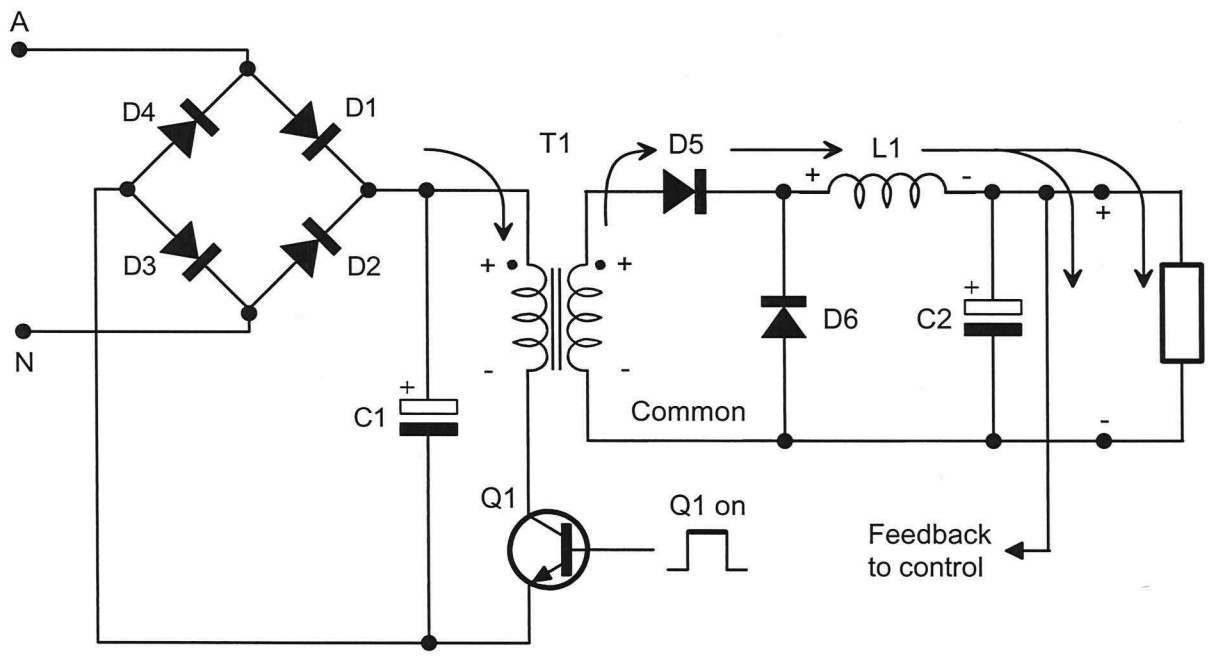

Figure 7 *The current around the circuit when Q1 is on*

Q1 off

During the pulse train's space time, the transistor turns off and the electromagnetic field that couples the primary and secondary windings of the transformer quickly collapses (the speed of the collapse is usually assisted for reasons that will be explained). When this happens, the polarity of the secondary voltage reverses and so *D5* turns off. This allows the field about the inductor (*L1*) to collapse and so it becomes a source of load current for exactly the same reasons that it does in the step-down switching regulator described in Section 6. The currents around the circuit during this time are shown in Figure 8 on the next page.

 Copyright: Not to be reproduced without permission

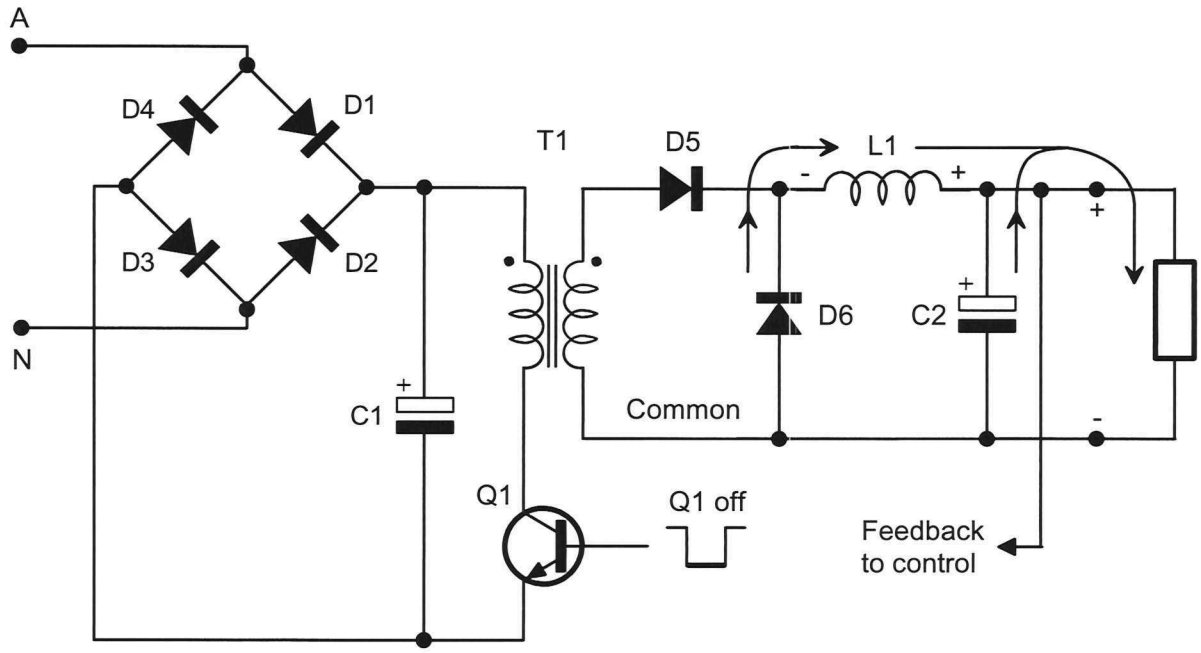

Figure 8 *The current around the circuit when Q1 is off*

Safety and switched-mode power supplies

Recall that SMPS are widely used for the power supply of mains-operated electronics equipment because of their excellent efficiency. However, without the right safety precautions, SMPS are *extremely* dangerous once the cover is removed.

WARNING!
To reduce the risk of your being accidentally electrocuted when working on mains operated equipment that use a SMPS, you **must** do one of two things (but not both): either a) plug the equipment into a GPO that is protected by an RCD; or b) plug the equipment into an *isolation* transformer.

The following notes discuss why using an isolation transformer is so important.

The need for a mains transformer

You'll already know that if a person touches the *active* (A) and *neutral* (N) connections of mains at the same time, a circuit is formed and current flows. When this happens the person receives an electric shock that can be fatal depending on their body's resistance at the time. At the very least, it'll hurt a lot.

You'll also already know that electrocution can occur if a person simply makes contact with active. To explain why, Figure 9 below shows the basic wiring arrangement of the mains distribution system here in Australia (and many other countries). As you can see, neutral is connected to earth (both at the local sub-station and at multiple other points in the system).

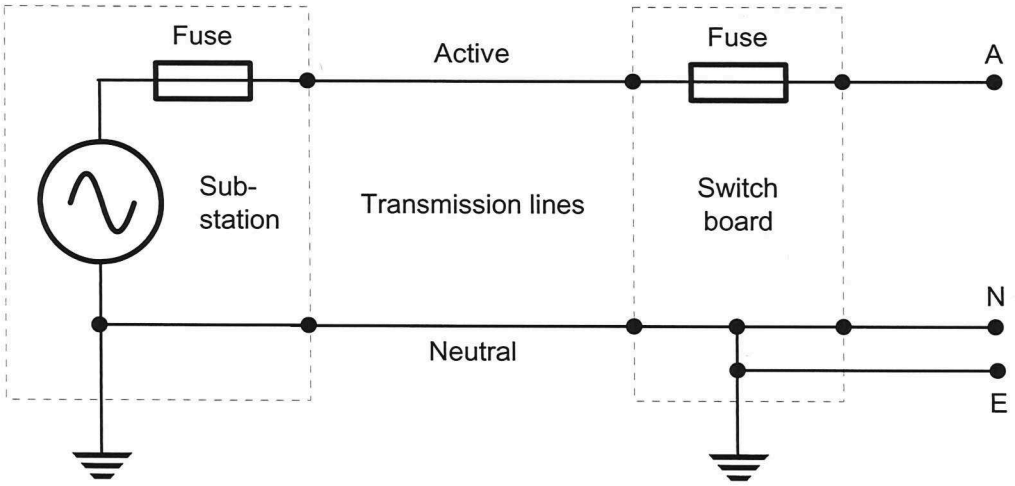

Figure 9 *The basic wiring arrangement of mains*

 Copyright: Not to be reproduced without permission

Wiring the distribution system in this way is designed to make working on mains safer by helping to ensure that faults that could cause an electrocution don't go unnoticed.

To explain, consider a distribution system in which neutral and earth are not connected together. If a fault in a piece of mains-operated equipment results in a direct connection between active and the equipment's housing (often called the *frame* or *chassis*), the housing becomes live. However, this fault condition would go unnoticed. People touching the housing wouldn't necessarily be electrocuted. But, if a person unwittingly touches the neutral line (or another faulty piece of equipment operating off another phase of the mains) while also touching the housing, they're likely to be electrocuted. In other words, the fault is a deadly accident waiting to happen.

By connecting neutral and earth together and requiring the housing of mains-operated equipment be hard-wired to earth, any fault that resulted in a direct connection between active and the housing would result in a dead-short across mains and immediately blow the fuse at the switchboard. This obviously disconnects the supply and reduces the potential for accidental electrocution.

However, wiring the mains distribution system this way introduces a new problem. The ground on which we walk becomes part of the power distribution circuit. That being the case, as Figure 10 below shows, even if a person only touches active, a circuit between active and neutral is still made due to the person's bodily contact with ground.

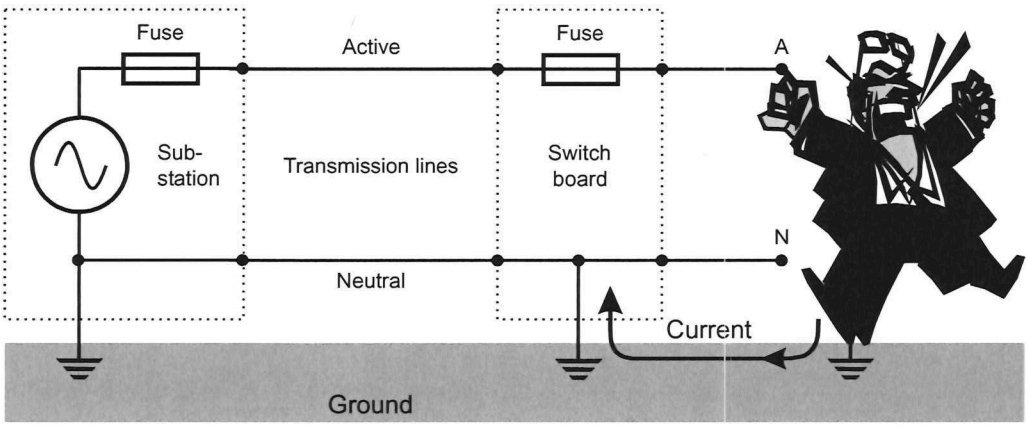

Figure 10 *Electrocution can occur simply by touching active because of bodily contact with ground*

To help prevent people from being electrocuted when operating or repairing faulty electronics equipment, it is mandatory for linear power supplies to connect the equipment to mains via a mains transformer. As Figure 11 below shows, the transformer electrically isolates the circuitry from mains. This means that it is impossible to close the circuit between active and neutral via bodily contact with ground when touching any point on the secondary side of the circuit.

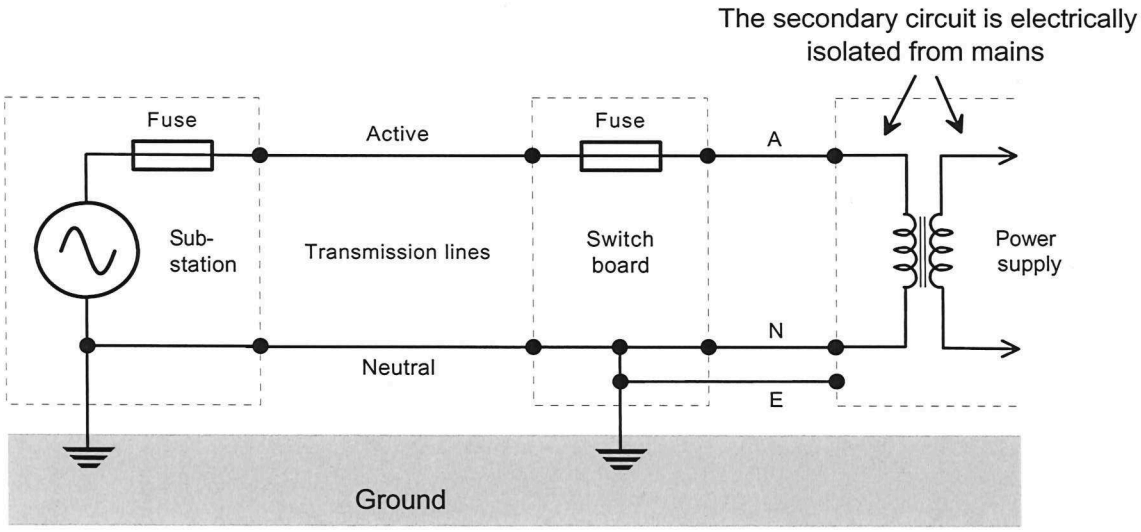

Figure 11 *The transformer isolates the secondary circuit from mains*

You can still be electrocuted though!
This is not to say that electrocution is impossible. Active must still connect to some point in the circuit and so contact with it is still possible (though the "wiring rules" these days demand that considerable trouble is taken to make accidental contact very difficult). Also, you can still get a shock if you touch both sides of the transformer's secondary winding if the secondary voltage is sufficiently large. And, it's theoretically possible for a mains transformer to develop a short-circuit between its primary and secondary windings. That being the case, don't assume that equipment is safe just because a mains transformer is used.

Why off-line switching regulators are so dangerous
This finally brings us back to the issue of why SMPSs can be so dangerous. Recall that these circuits don't need a mains transformer because the configuration already uses a transformer that can provide the necessary electrical isolation between mains and its output.

While this makes the off-line isolating switching regulator sufficiently safe for the operator of the equipment in which it's being used, it's a different story for the repair technician. This is because the rectifier and filtering is electrically part of the transformer's primary circuit which means that active is present on more points in the circuit than for linear power supplies. Obviously, this increases the chances of active being accidentally touched.

 Copyright: Not to be reproduced without permission

Making matters potentially worse, much of the switching transistor's drive circuitry often electrically part of the primary circuit (unless additional isolation circuitry is used which is discussed later in this chapter). Although most of the drive circuitry is not directly connected to active, a fault could cause active to be present in places that you might not expect to find it.

Reducing the risk of electrocution

To avoid electrocution by accidentally contacting active when working on equipment that uses a SMPS the equipment **must** be plugged into either: a) a GPO that is protected by an RCD; or b) an isolation transformer.

Isolation transformers are simply approved mains transformers with a turns ratio of 1:1. This means that the isolation transformer's output voltage is the same as the mains voltage and the equipment's operation is completely unaffected. However, its use removes the direct connection between the active on mains and the circuit making contact with active by touching any part of the circuit impossible. That said, it is still possible to be receive an electric shock if you touch both outputs of the isolation transformer.

Switching regulator design considerations

The following notes discuss several switching regulator design and implementation considerations that having knowledge of them should help you when interpreting schematic diagrams, fault-finding circuits, and substituting components.

Electrical isolation in the feedback path

As the discussion over the last few pages has indicated, electrical isolation of the low voltage circuit from the mains in all mains-operated equipment is essential to reducing the risk of accidental electrocution. Linear power supplies use a dedicated transformer for this purpose and the isolation occurs right at the input to the power supply.

Both the flyback and forward converters provide the necessary isolation via a transformer also. But the rectification, filtering and switching transistor precede it (and are said to be "hot"). Given the fact that there's an electrical path between mains and the low voltage circuitry via the feedback to the switching transistor's drive circuitry, the right combination of faults could still allow active to be directly connected to low voltage circuits and even the power supply's output! This is shown on the circuit of an flyback converter in Figure 12 below.

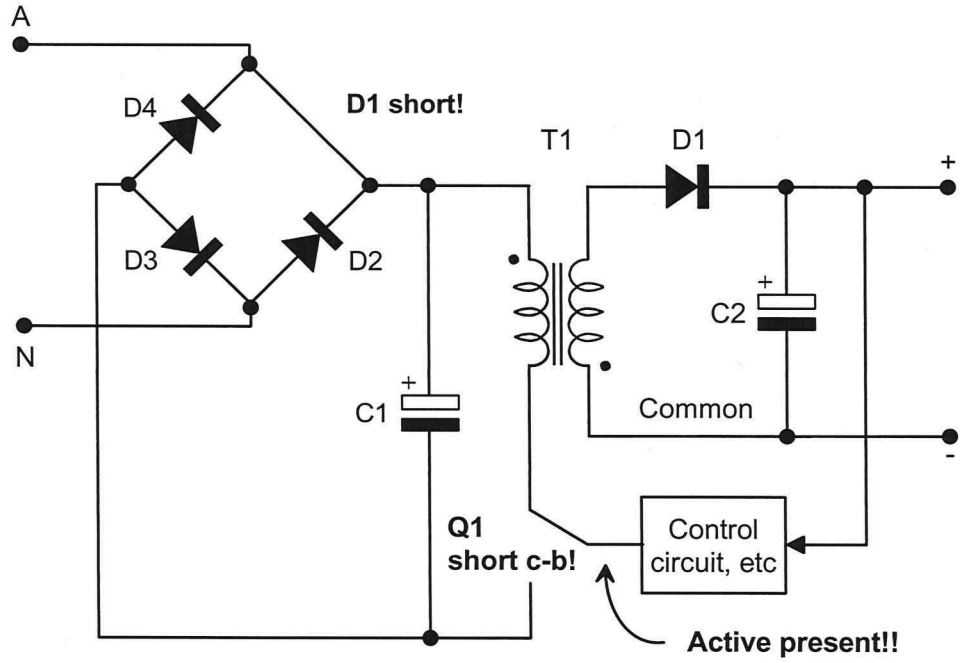

Figure 12 *The right combination of faults could connect active to low voltage circuitry*

Obviously, electrical isolation must also be included in the feedback path to help prevent this situation. A transformer can be used for this purpose but, as the feedback path is used to transfer "information" and not energy, an opto-coupler can also be used. In fact, opto-couplers are generally preferred because they're smaller and cheaper.

 Copyright: Not to be reproduced without permission

There are several types of opto-coupling devices and Figure 13 below shows one example.

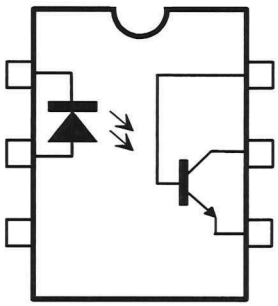

Figure 13 *A typical IC opto-coupler*

As you can see, this opto-coupler is inside a six pin DIL integrated circuit and consists of an LED and a photosensitive transistor (called a *photo-transistor*). The device provides electrical isolation (typically up to 1,500V) because the LED and photo-transistor are not electrically connected.

The operation of the opto-coupler is straight forward. The photo-transistor has a base that can be forward biased in the usual way by making the base-emitter voltage (V_{BE}) 0.6V, but it can also be forward biased by the light that is emitted when the LED is forward biased (the IC is fully sealed so incidental light cannot affect the photo-transistor's operation).

There are a number of ways that the opto-coupler can be incorporated into the feedback path and an example is shown in Figure 19 on page 8-19.

Preventing the transformer from saturating

Recall that, when the field about an inductor collapses, a back emf is developed across it that induces current to flow in the same direction that it was flowing while the inductor was being energised. If this current isn't allowed to flow then the magnetic field about the inductor will de-energise more slowly.

You may not think of transformers in this way but their windings are inductors (particularly the primary winding of the transformer used in the forward converter) and so the same issue applies. This is problematic with transformers because, if the primary winding cannot de-energise quickly enough, the core can saturate with magnetism which is an impediment to its operation.

Two solutions are used to ensure that the primary of the transformer in flyback and forward converters fully de-energise to avoid this problem.

The first involves a diode and resistor connected across the transformer's primary as shown on the circuit of a flyback converter in Figure 14 below. When the switching transistor is turned off, the field about the primary winding collapses, reversing the potential difference across it. This forward biases *D5* and the primary winding's de-energise current flows around the loop via *D5* and *R1*.

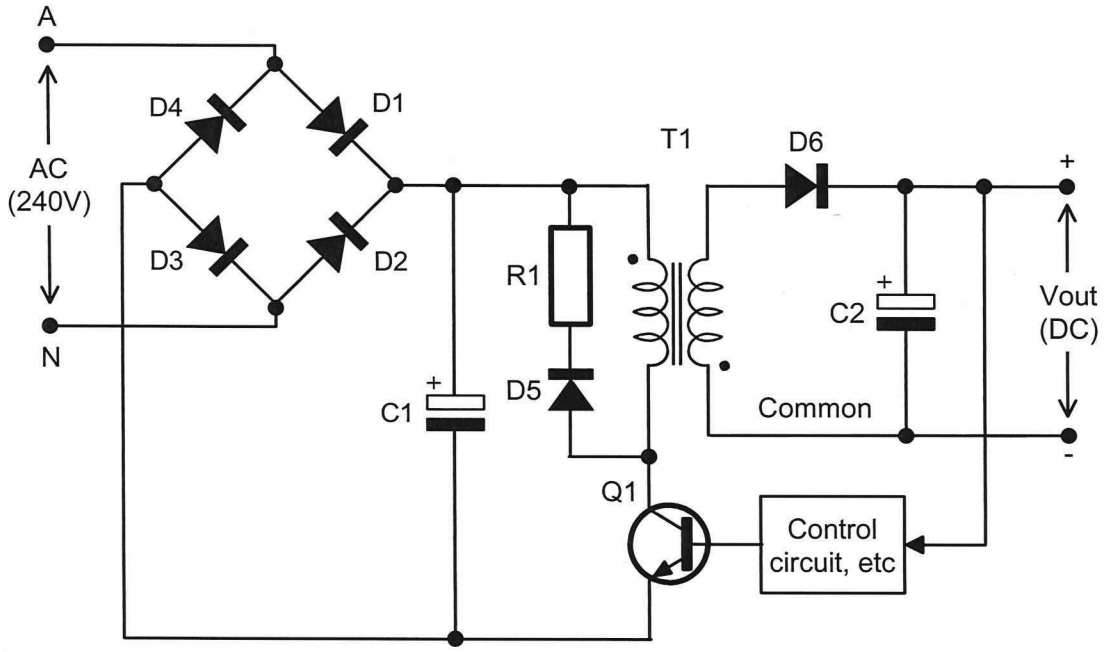

Figure 14 *The inclusion of D5 and R1 help the transformer's primary winding to de-energise*

(There are as many as eight names for *D5* in the circuit above but the author has preferred not to give you any of them here to avoid confusion. It's more important that you know the purpose of this diode than its name.)

 Copyright: Not to be reproduced without permission

An alternative to the arrangement in Figure 14 is an additional winding in the transformer that is closely coupled to the primary winding called the *desaturation* winding. This is shown in Figure 15 below on the circuit of a forward converter and notice that it is wound in the opposite direction to the primary winding.

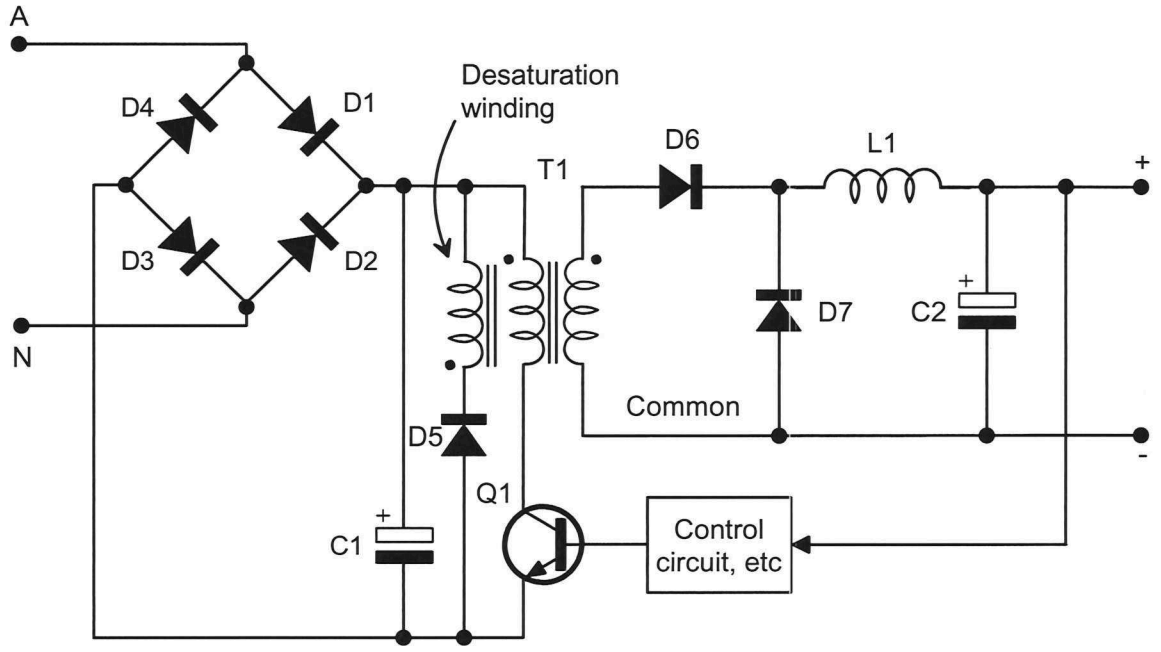

Figure 15 *Off-line forward converter using a transformer with a desaturation winding*

When the switching transistor is on, the polarity of the induced voltage across the extra winding reverse biases the diode and so the winding looks invisible to the primary circuit. When the transistor turns off, the polarity of the induced voltage across the winding reverses and forward biases the diode. This provides a current path that allows the transformer's core to de-energise more quickly around the loop formed by the capacitor *C1* which would look like a relatively low resistance path to a changing voltage.

High-speed switching transistors and schottky diodes

The speed at which the switching transistor and diodes are turned on and off in most switching regulators is likely to be too fast for conventional power transistors (such as the BD139) and rectifier diodes (such as the 1N4004). If conventional transistors and diodes are used, the circuit is unlikely to work and the components may even fail and/or damage other components in the circuit.

That being the case, transistors and diodes capable of switching at these frequencies must be used. For this reason, it is common to see *schottky* diodes (that is, diodes that employ the Schottky Barrier Principle) used in switching regulators. The schematic symbol for the schottky diode is shown in Figure 16 below.

Figure 16 *Schematic symbol of a schottky diode*

Filter capacitors

As you know, capacitors have capacitive reactance (that is, the opposition to AC current that changes with frequency). However, you may not know that capacitors also have a small amount of pure AC resistance (which is an opposition to AC current that doesn't change with frequency). This resistance is known as the *equivalent series resistance* (ESR) because its effect on the performance of a capacitor is the same as having a small value resistor connected in series with it. This is modelled in Figure 17 below.

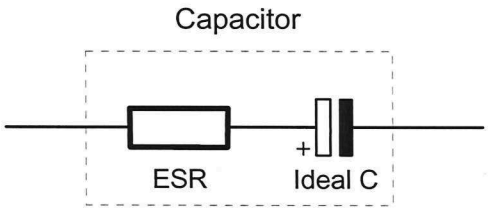

Figure 17 *A model capacitor showing the ESR as a resistor in series with an ideal capacitor*

Recall from your earlier learning that a resistor connected in series with a capacitor decreases its rate of charge and discharge, increasing the time it takes to do both. This has implications for ripple filtering at the output of switching regulators because, at the rate at which they switch, the ESR may not allow a filter capacitor to discharge quickly enough to help deliver energy to the load when it is supposed to. This increases the ripple on the output and lowers the effective DC output voltage

 Copyright: Not to be reproduced without permission

To minimise this problem, it is common for switching regulator design to provide the necessary filter capacitance using several smaller capacitors connected in parallel instead one large capacitor (as shown in Figure 19 on page 8-19). As you know, connecting capacitors in parallel increases the total capacitance and doing so reduces the effective ESR because connecting resistors in parallel lowers the total resistance.

That said, the problem of capacitor-ESR may adversely affect the operation of the switching regulator later in its life because the ESR of electrolytic capacitors (which are the type widely used for filter capacitors) increases with age. This would be noticeable by a high frequency ripple superimposed on the DC output voltage with a comparable measured reduction in the DC output voltage.

Toroidal inductors

As you know, an inductor stores energy as an electromagnetic field about itself. Unfortunately, some of this energy escapes into the free-space that surrounds the inductor and becomes electromagnetic radiation (EMR).

This EMR creates two problems. First, the lost energy is no-longer available to be delivered to the load and so the circuit's efficiency is reduced (though the efficiency is still better than for linear power supplies). Second, the electromagnetic radiation that is emitted has the same frequency as the SMPS's switching which, if picked-up by the PCB tracks, wires and components of nearby electronics equipment, can cause radio frequency interference (RFI).

To lessen these effects, toroidal inductors are used instead of conventional inductors and an example is shown in Figure 18 below. These devices are wound on a donut-shaped core and concentrate their electromagnetic energy in the core. This dramatically reduces the electromagnetic energy that is allowed to escape into the surrounding area. The core is usually made of ferrite to reduce the number windings needed to achieve the required inductance. This can help reduce the inductor's size when thicker wire must be used to handle larger load currents.

Figure 18 *Toroidal inductor*

[As an aside, toroidal transformers are also regularly used for the chopper circuit in forward converters to reduce EMR at radio frequencies.]

A complete SMPS (off-line switching regulator)

Figure 19 below shows the complete circuit of a SMPS. As you can see the circuit uses one of the two basic SMPS designs discussed at the beginning of this chapter. It also uses the technique for implementing closed-loop control introduced and explained in several previous chapters. And finally, the circuit also incorporates all of the design considerations discussed in this chapter.

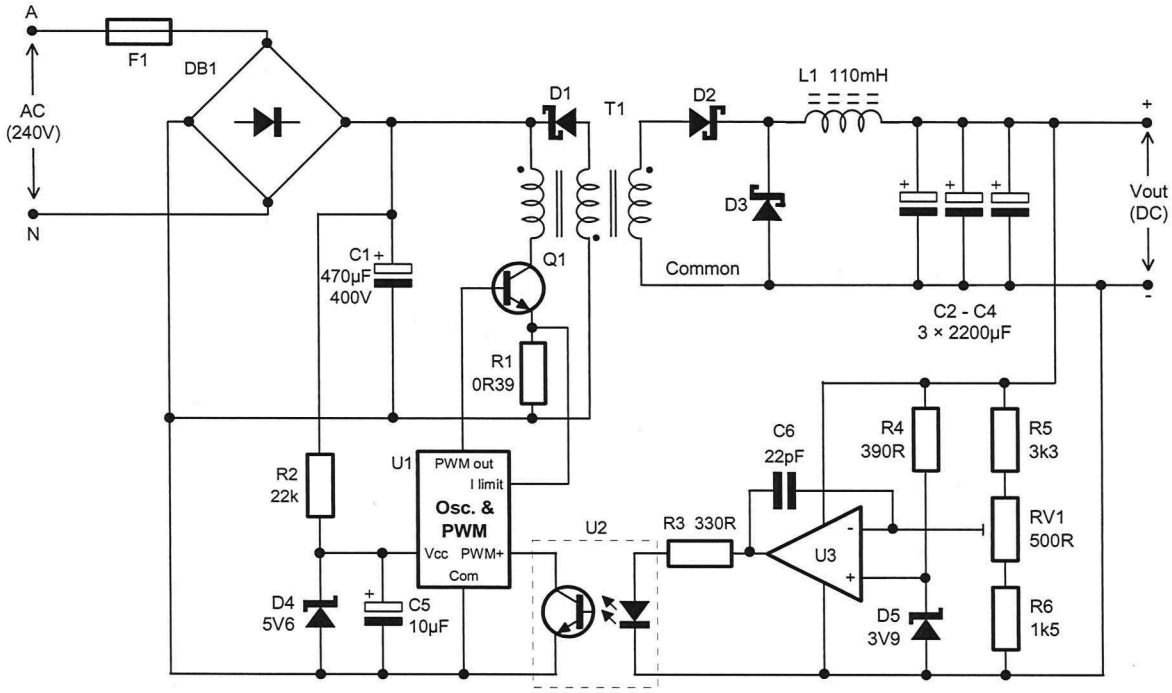

Figure 19 *A complete SMPS (off-line switching regulator)*

Now see whether you can do the following:

- Explain the purpose of the components or groups of components listed below and, where applicable, state their name (eg *filter capacitor* or *shunt regulator*, *sampling network*, etc):

  - *DB1*
  - *C1*
  - *Q1*
  - *R1*
  - *T1*
  - *D2*
  - *D3, L1* and *C2* to *C4*
  - *R2* and *D4*
  - *R2 and C5*
  - *R5, RV1 and R6*
  - *RVI*
  - *R4 and D5*
  - *U1*
  - *U2*
  - *U3*
  - *R3*
  - *C6*

 Copyright: Not to be reproduced without permission

- Predict the following:
  - The unregulated DC voltage (ie the voltage across *C1*)
  - The circuit's minimum and maximum output voltage
  - The voltage on the inverting pin of *U3*

- Answer the following:
  - What components are in the "hot" part of the circuit?
  - What are the two things you could do to reduce your risk of fatal electrocution when working on this SMPS?
  - Is this SMPS a flyback converter or a forward converter?
  - Which DC-DC converter configuration is being used?
  - Is *T1* part of the energy recovery circuit?
  - What's the purpose of the winding of *T1* connected to *D1*?
  - Why might a toroidal inductor be used for *L1*?
  - What type of diode is used for *D1*, *D2* and *D3* and why must they be used in preference to regular rectifier diodes?
  - What type of transistor would likely be used for *Q1*?
  - Why are three capacitors 2200μF used for *C2* to *C4* instead of just one 6600μF capacitor?
  - What two other devices that could be used for *D5* in place of a zener diode and what aspect of the circuit's performance would they improve if used?
  - Why is *U2* being used when the transformer already provides electrical isolation?
  - Why can a shunt regulator be used to provide a regulated *Vcc* for *U1* in this circuit when this type of regulation is the least efficient?
  - What would you expect to see on the base of *Q1* if you examined this leg of the transistor using a CRO?
  - Is *F1* part of a *crowbar protection* circuit? What informs your answer?
  - What are the likely faults that each of the components in the circuit can experience?

The function name and purpose of each of the components in the circuit, how to predict the key voltages around the circuit, and the answers to the questions above can be found in Sections 6 to 8 inclusive.

Importantly, the strategy for fault-finding this circuit is similar to the one provided in Section 7 (see pages 7-15 to 7-18 inclusive) but a little different too. How would you go about fault-finding this circuit? It's time for you to think about this for yourself because every linear power supply and switched-mode power supply will be different so there's no one process that can be used to fault-find them all.

Review questions

Answer these questions to check your understanding of what you have learnt for this chapter. Doing this will also help to prepare you for the tests.

1. What safety precaution must you take when repairing off-line switching regulators or repairing equipment powered by an off-line switching regulator?

_____

_____

2. What is the purpose of this safety precaution?

_____

_____

3. What is the name of the two basic ways of implementing a SMPS?

_____

_____

4. What's the fundamental difference between the transformers used in the two SMPSs given in your answer to the previous question?

_____

_____

_____

_____

 Copyright: Not to be reproduced without permission

Questions 5 to 12 refer to the circuit in Figure 1 below

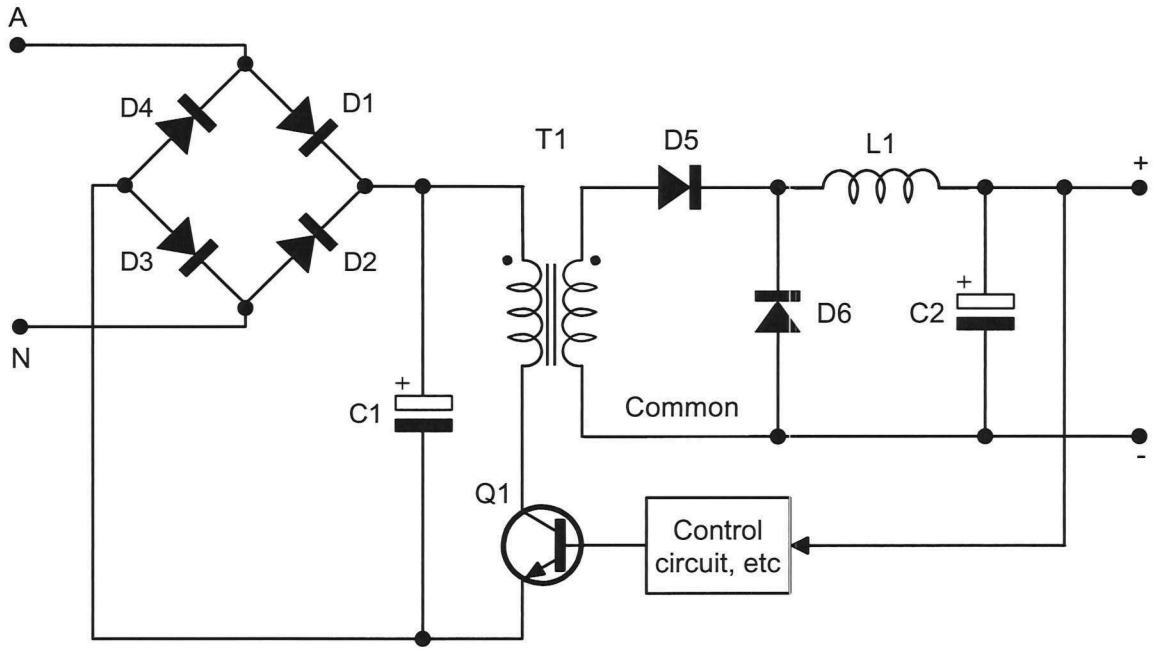

Figure 1

5. What is the name of this circuit?

_____

6. Calculate the exact theoretical DC voltage across the capacitor *C1*?

_____

_____

_____

7. Why is it good enough to approximate this to 340V DC?

_____

_____

8. Which of the following statements is true? (Note: There can be more than one.)

   ☐ The regulated DC output voltage can be lower than the circuit's unregulated DC input.
   ☐ The regulated DC output voltage can be higher than the circuit's unregulated DC input.
   ☐ The regulated DC output voltage can be the same as the circuit's unregulated DC input.
   ☐ None of the above

9. Draw on Figure 1 the currents around the circuit when *Q1* is on.

10. Use a different coloured pen to draw on Figure 1 the currents around the circuit when *Q1* is off.

11. What would you expect to happen to the circuit's output voltage if the diode *D6* went open-circuit? [**Tip:** Think about what would be different during the switching transistor's on and off times without *D6* in the circuit.]

    _____

12. What would you expect to happen to the circuit's output voltage if the switching transistor's collector went open-circuit? [**Tip:** Again, think about what would be different during the switching transistor's on and off times without the transistor's collector in the circuit.]

    _____

 Copyright: Not to be reproduced without permission

Questions 13 to 18 refer to the circuit in Figure 2 below

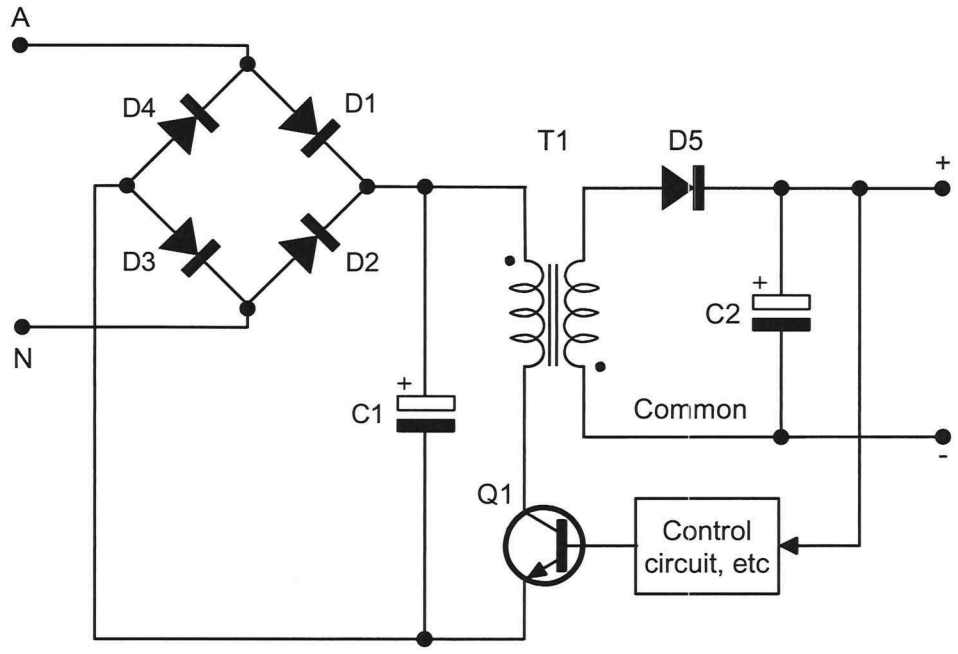

Figure 2

13. What is the name of this circuit?

_____

14. Which of the following statements is true? (Note: There can be more than one.)

- ☐ The regulated DC output voltage can be lower than the circuit's unregulated DC input.
- ☐ The regulated DC output voltage can be higher than the circuit's unregulated DC input.
- ☐ The regulated DC output voltage can be the same as the circuit's unregulated DC input.
- ☐ None of the above

15. Draw on Figure 1 the currents around the circuit when *Q1* is on (assume the circuit has been operating for more than one cycle of the PWM's signal).

16. Use a different coloured pen to draw on Figure 1 the currents around the circuit when *Q1* is off.

17. What would you expect to happen to the circuit's output voltage if the diode *D5* went short-circuit? [**Tip:** Think about what would be different during the switching transistor's on and off times with *D5* replaced by a short piece of wire.]

18. What would you expect to happen to the circuit's output voltage if the switching transistor's base-emitter p-n junction went short-circuit? [**Tip:** Again, think about what would be different during the switching transistor's on and off times if the transistor's had a short piece of wire connected between its base and emitter leads.]

Questions 19 to 51 refer to the circuit in Figure 3 below

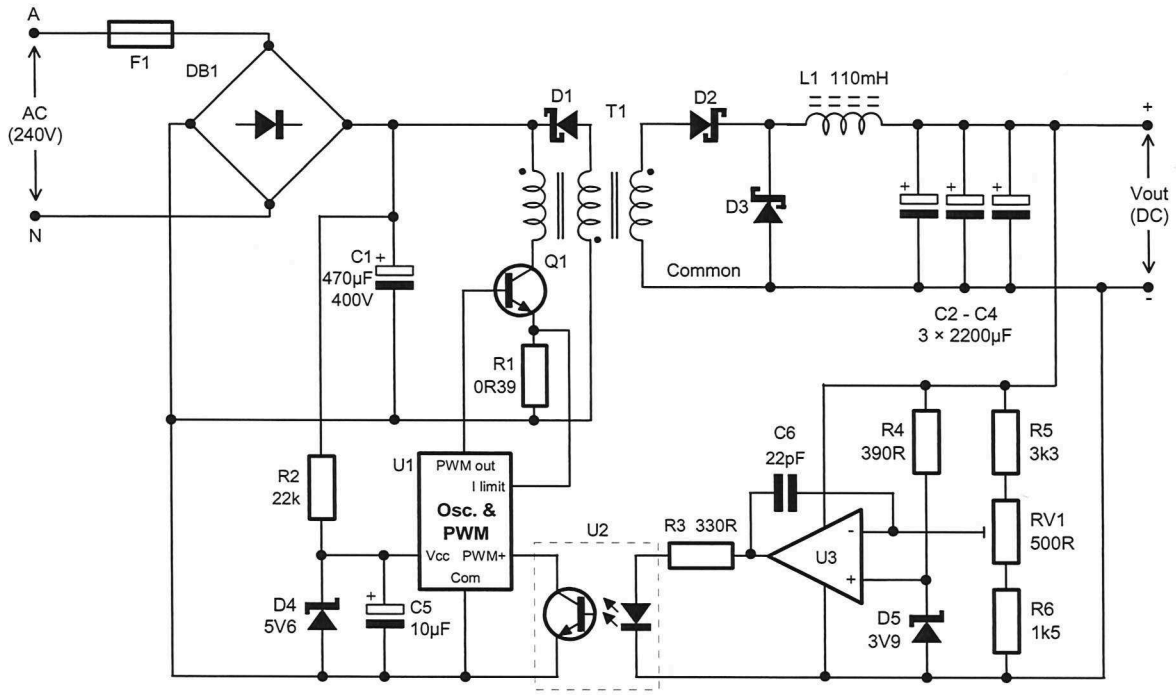

Figure 3

19. What type of SMPS is this circuit?

 Copyright: Not to be reproduced without permission

20. What is the name of the circuit involving *Q1* and *T1*?

_____

21. What type of circuit is formed by the components *R2* and *D4*?

_____

22. What type of circuit is formed by the components *R4* and *D5*?

_____

23. What type of diodes are *D1* to *D3*?

_____

24. What is the purpose of *R1*?

_____

25. What is the purpose function of *R2*?

_____

26. What is *DB1*?

_____

27. What is the purpose of *C1*?

_____

28. What type of device is *D5*?

_____

29. What type of material is the inductor's core made from?

_____

30. What is best shape for this inductor's core?

_____

31. What are two advantages of using this shape for this inductor's core?

_____

_____

_____

32. Why are three 2200μF capacitors connected across the output instead of one 6800μF capacitor?

_____

33. What type of voltage would you expect to see on the output of *U3*?

_____

34. What is the name of *U2*?

_____

35. What is the purpose of *U2*?

_____

36. What is the purpose of *R3*?

_____

37. What is the name of the middle winding in *T1*?

_____

38. What is the purpose of this winding?

_____

_____

 Copyright: Not to be reproduced without permission

39. When does *D1* turn on?

40. What is the function of *R5*, *RV1* and *R6*?

41. What is the purpose of *R4*?

42. What type of voltage would you expect to see on the PWM_{out} pin of *U1*?

43. Calculate the circuit's minimum output voltage.

44. Calculate the circuit's maximum output voltage.

45. What is the purpose of *RV1*?

46. Does this circuit have *crowbar protection*?

47. What does it mean to say that a portion of the SMPS circuit is "hot"?

48. Draw a circle around the "hot" portion of the circuit. **Tip:** Do this in pencil so you can change it if you get this question wrong.

49. What would you expect to happen to the circuit's output voltage if the diode *D5* went short-circuit?

50. What would you expect to happen to the circuit's output voltage if the LED inside *U2* went open-circuit?

51. What would you expect to happen to the circuit's output voltage if *D4* went short-circuit?

Copyright: Not to be reproduced without permission

Student notes

Answers to review questions

Section 1

1. more efficient but is usually a more complex circuit.

2. less efficient but produces less EMR.

3. line voltage and load current.

4. Pass transistor

5. *R1* has two jobs. It provides a current path for the zener diode's current and the transistor's base current. It also limits the zener diode's current to prevent it from being damaged.

6. *D1* has two jobs. It sets up the output voltage by setting the pass transistor's base voltage. It also provides the circuit with line regulation. [It does this by holding the transistor's base voltage constant despite changes in the unregulated DC input voltage.]

7. *C1* provides smoothing of the pulsating DC output from the bridge rectifier. [Note: *C1* is not really part of the regulator.]

8. an unregulated DC voltage.

9. increases.

10. a regulated DC voltage.

11. remains unchanged.

12. increases.

13. remains unchanged (assuming the zener diode is ideal).

14. increases.

15. remains unchanged.

16. remains unchanged.

17. remains unchanged.

18. decreases.

19. The voltage at "X" must be at least 2V bigger than the voltage at "Y"

 Copyright: Not to be reproduced without permission

Section 1 (continued)

20. $V_{B(Q1)} = V_{D1} = 8.2\text{V}$

21. $Vout = V_{B(Q1)} - 0.6V$

$Vout = 8.2V - 0.6V$

$Vout = 7.6V$

22. $I_{RL} = \frac{V_{RL}}{R_L}$

$I_{RL} = \frac{7.6V}{60\Omega}$

$I_{RL} = 126.7mA$

23. $P_{RL} = I_{RL} \times V_{RL}$

$P_{RL} = 126.7mA \times 7.6V$

$P_{RL} = 962.7mW$

24. $V_{CE(Q1)} = Vin_{(unregulated)} - Vout_{(regulated)}$

$V_{CE(Q1)} = 14V - 7.6V$

$V_{CE(Q1)} = 6.4V$

$P_{Q1} = I_{RL} \times V_{CE(Q1)}$

$P_{Q1} = 126.7mA \times 6.4V$

$P_{Q1} = 811mW$

Section 1 (continued)

25. $V_{R1} = Vin_{(unregulated)} - V_{D1}$

$V_{R1} = 14V - 8.2V$

$V_{R1} = 5.8V$

$R1 = \frac{V_{R1}}{I_{D1(nom)}}$

$R1 = \frac{5.8V}{7mA}$

$R1 = 828.6\Omega$

The closest *preferred* resistor value to 828.6Ω is 820Ω.

26. $V_{B(Q1)} = 22V$

$Vout = 21.4V$

$I_{RL} = 446mA$

$V_{CE(Q1)} = 8.6V$

$P_{Q1} = 3.8W$

So the pass transistor's minimum power rating for the load resistance specified must be at least 3.8W.

27. The minimum allowable unregulated DC input voltage is 23.4V (that is, 2V bigger than the regulated DC output voltage).

For that input voltage, the power dissipated by the pass transistor changes to $P_{Q1} = 892mW$.

28. The circuit's efficiency would improve.

29. *C1* improves the circuit's line regulation by smoothing out transients on the input.

30. line regulation.

 Copyright: Not to be reproduced without permission

Section 2

1.

Fault	$V_{C(Q1)}$	$V_{B(Q1)}$	$V_{E(Q1)}$
Open-circuit emitter on Q1	Stays the same	Stays the same	Decreases
Open-circuit collector on Q1	Stays the same	Stays the same	Decreases
R1 high	Stays the same	Increases	Increases
Short-circuit collector-emitter on Q1	Decreases	Stays the same	Increases
Short-circuit D1	Stays the same	Decreases	Decreases
Open-circuit R1	Stays the same	Floats	Decreases
Open-circuit base on Q1	Stays the same	Stays the same	Decreases
Open-circuit D1	Stays the same	Increases	Increases
Short-circuit base-emitter on Q1	Stays the same	Stays the same	Increases

Section 3

1. improves load regulation only.

2. Because changes (or errors) in output voltage are amplified (by *Q2*) forcing the pass transistor to correct for the changes more aggressively.

3.

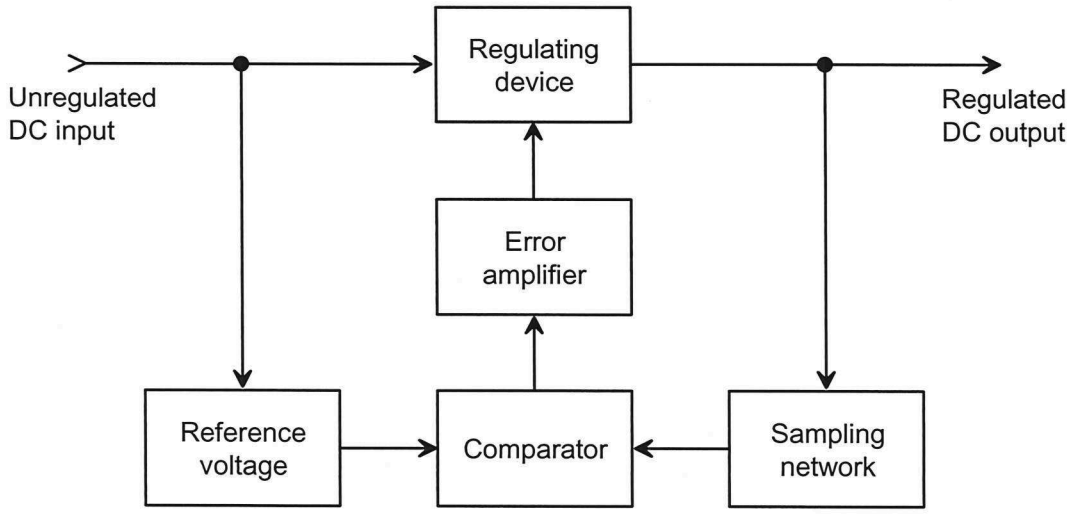

4. R2 and D1

5. R3 and R4

6. Q2

7. Q2

8. Pass transistor

9. Temperature compensated zener diode
   Bandgap voltage reference

10. 6.2V

11. $V_{B(Q2)} = V_{E(Q2)} + 0.6V$

    $V_{B(Q2)} = 6.2V + 0.6V$

    $V_{B(Q2)} = 6.8V$

 Copyright: Not to be reproduced without permission

Section 3 (continued)

12. $I_{R4} = \frac{V_{B(Q2)}}{R4}$

$I_{R4} = \frac{6.8V}{680\Omega}$

$I_{R4} = 10mA$

$V_{R3} = I_{R4} \times R3$

$V_{R3} = 10mA \times 220\Omega$

$V_{R3} = 2.2V$

$Vout = V_{R3} + V_{R4}$

$Vout = 6.8V + 2.2V$

$Vout = 9V$

OR

$Vout = V_{B(Q2)} \times \left(\frac{R3}{R4} + 1\right)$

$Vout = 6.8V \times \left(\frac{220\Omega}{680\Omega} + 1\right)$

$Vout = 9V$

13. 9.6V

14. 8V

15. 150mA

16. As $V_{CE(Q1)} = 8V$

And, as $I_{C(Q1)} = I_{RL} = 150mA$

Then...

$P_{Q1} = I_{RL} \times V_{CE(Q1)}$

$P_{Q1} = 150mA \times 8V$

$P_{Q1} = 1.2W$

Section 3 (continued)

17. 15.19V

18. Improve the reference voltage (zener diode) transient response

    [Note: It would be tempting to think that *C1* is a *filter* capacitor for getting rid of ripple but it's not. Filter capacitors are connected directly across the output of the rectifier stage (like *C1* in Figure 4 on page 3-7) which means that they're also connected directly across the regulator's input. In the case of *C1* in this question, the capacitor is connected in series with a resistor which the theory notes in Section 2 explain is for improved transient response.

    A clue that this capacitor is not a filter capacitor is its size. At 10μF, it isn't going to offer a lot of assistance in reducing ripple!]

19. Because 2.5V zener diodes are uncommon (if they're available at all). At the same time, 2.5V is a common value for bandgap voltage references.

20. R5 open-circuit.

21. $Vout_{(\min)} = V_{B(Q2)} \times \left(\frac{R3}{R4+RV1} + 1\right)$

    $Vout_{(\min)} = 5.3V \times \left(\frac{5k6\Omega}{3k9\Omega+2k\Omega} + 1\right)$

    $Vout_{(\min)} = 10.33V$

22. $Vout_{(\max)} = V_{B(Q2)} \times \left(\frac{R3+RV1}{R4} + 1\right)$

    $Vout_{(\max)} = 5.3V \times \left(\frac{5k6\Omega+2k\Omega}{3k9\Omega} + 1\right)$

    $Vout_{(\max)} = 15.63V$

23. $Vout_{(\min)} = V_{B(Q2)}$

    $Vout_{(\min)} = 5.3V$

24. $Vout_{(\max)} = V_{B(Q2)} \times \left(\frac{RV1}{R4} + 1\right)$

    $Vout_{(\max)} = V_{B(Q2)} \times \left(\frac{2k\Omega}{3k9\Omega} + 1\right)$

    $Vout_{(\max)} = 8V$

 Copyright: Not to be reproduced without permission

Section 4

1. The op amp's open-loop gain is mucher larger than the gain of a BJT so it will correct for errors on the output more aggressively.

   [Here's a useful way to think about this. Any change on the regulator's output voltage (an "error") causes a change in the sample voltage which, in turn, causes a change in the potential difference between the op amp's inputs. As the op amp's open-loop gain is much larger than the gain of a BJT, the change in the potential difference between its inputs will be amplified by much more than the change between a base and emitter if the error amp was a BJT. This means that the op amp begins to correct for smaller output errors than the BJT can do.]

2. R1 and D1

3. R2 and R3

4. U1

5. Temperature compensated zener diode
   Bandgap voltage reference

6. $V_{\oplus} = V_{REF}$

   $V_{\oplus} = 2.5V$

7. $V_{R3} = V_{\oplus}$

   $V_{R3} = 2.5V$

8. $Vout = V_{REF} \times \left(\frac{R2}{R3} + 1\right)$

   $Vout = 2.5V \times \left(\frac{39k}{15k} + 1\right)$

   $Vout = 9V$

9. $V_{B(Q1)} = Vout + 0.6V$

   $V_{B(Q1)} = 9V + 0.6V$

   $V_{B(Q1)} = 9.6V$

Section 4 (continued)

10. $P_{Q1} = V_{CE(Q1)} \times I_{RL}$

$P_{Q1} = (30V - 9V) \times \frac{9V}{67\Omega}$

$P_{Q1} = 21V \times 134mA$

$P_{Q1} = 2.82W$

11.

Fault	$V_{non\text{-}inverting\ input}$	V_{R3}	$Vout$	$V_{B(Q1)}$
Short-circuit D1	Decreases	Decreases	Decreases	Decreases
Open-circuit R2	Stays the same	Decreases	Increases	Increases
R1 open-circuit	Floats	Decreases	Decreases	Decreases
Open-circuit D1	Increases	Increases	Increases	Increases

12. $Vout = V_{REF} \times \left(\frac{R2}{RV1+R3} + 1\right)$

$Vout = 7.5V \times \left(\frac{5k}{10k+5k} + 1\right)$

$Vout = 10V$

13. $Vout = V_{REF} \times \left(\frac{R2+RV1}{R3} + 1\right)$

$Vout = 7.5V \times \left(\frac{5k+10k}{5k} + 1\right)$

$Vout = 30V$

 Copyright: Not to be reproduced without permission

Section 4 (continued)

14. $Vout = V_{REF} \times \left(\frac{R2+RV1}{R3} + 1\right)$

$Vout = 7.5V$

15. $Vout = V_{REF} \times \left(\frac{RV1}{R2} + 1\right)$

$Vout = V_{REF} \times \left(\frac{10k}{5k} + 1\right)$

$Vout = 22.5V$

Section 5

1. current limiting.

2. Crowbar (over-voltage) protection.

3. D2, R5, T1 and the fuse.

4. Silicon Controlled Rectifier (SCR)

5. >12V

6. The diode *D2* conducts. This provides current to the gate of the SCR and the resistor *R5* ensures that it is of a high enough potential that the SCR fires. When this happens the SCR conducts and effectively acts like a short circuit. This allows a large enough current to flow through the fuse to blow disconnecting the regulator from the rest of the power supply.

7. the load.

8. Current limiting (Constant current type).

9. $I_{CL} = \frac{0.6V}{R3}$

   $I_{CL} = \frac{0.6V}{0.33\Omega}$ [Note: It is common practice to write resistor values below 1Ω as 0R×× where the letter R replaces the decimal point.]

   $I_{CL} = 1.82A$

10. the output voltage goes down but the load current stays relatively constant.

11. the pass transistor.

12. D1 to D4: Rectification.

    C1: Ripple filtering.

    R2 & C2: Improved reference voltage ripple rejection.

    R2 & R3: Set the operating current for the zener diode.

    D5: Reference voltage.

    RV1: Adjust the variable output voltage.

    R5, R6 and RV1: Sample the output voltage (global negative feedback).

    D6 & R7: Set the level at which the overvoltage protection activates.

    R4 & Q3: Current limiting.

    T1 & F1: Over-voltage protection.

 Copyright: Not to be reproduced without permission

Section 5 (continued)

13. D2, R5, T1 and the fuses

14. VR1

15. R1 and R2

16. C2

17. The fuse

18. R3, VR2 and R4

19. Q2

20. The fuse, Q1 and VR1

21. VR2

22. The series combination of VR2 (at the wiper) and R4

23. VR1 and Q2

24. R1 and C1

25. D2

Section 6

1. they're much more efficient.

2. All of the above

3. DC-DC converters can emit significant amounts EMR at radio frequencies causing RFI in nearby circuits.

4. Step-down
   Inverting
   Step-up
   Isolating

5. Step-down

6. Step-up
   Isolating

7. Inverting
   Isolating

8. Inverting

9. Step-down

10. All of the above

11. Step-up DC-DC converter

12. Boost regulator

13. It's always bigger than the input voltage and non-inverted.

14.

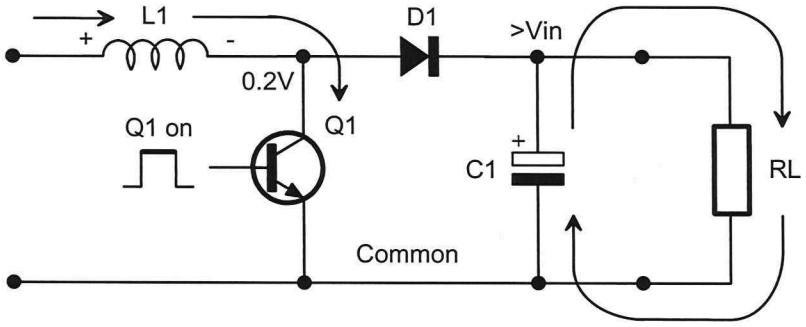

 Copyright: Not to be reproduced without permission

Section 6 (continued)

15.

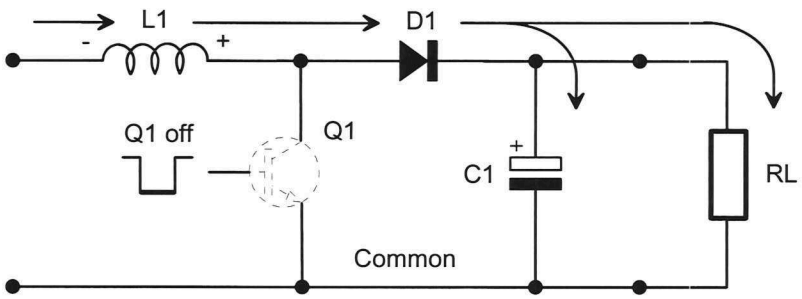

16. Isolating DC-DC converter

17. It can be either smaller or bigger than the input voltage and inverted or non-inverted.

18.

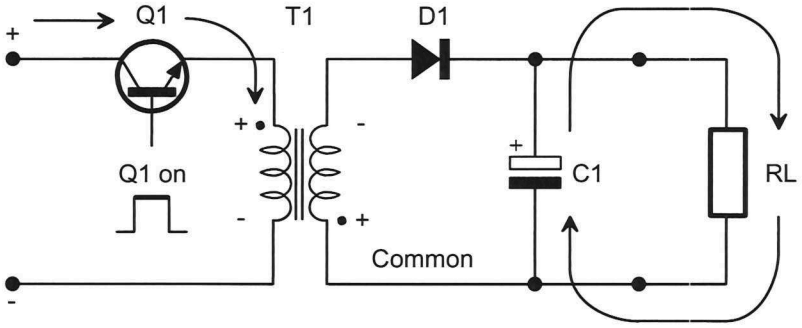

19.

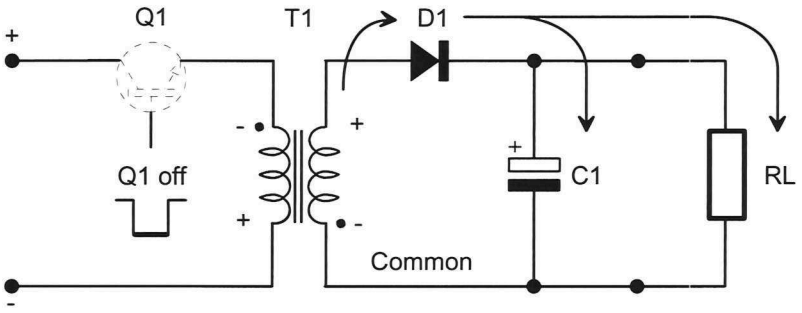

Section 6 (continued)

20. Step-down DC-DC converter

21. It's always smaller than the input voltage and non-inverted.

22.

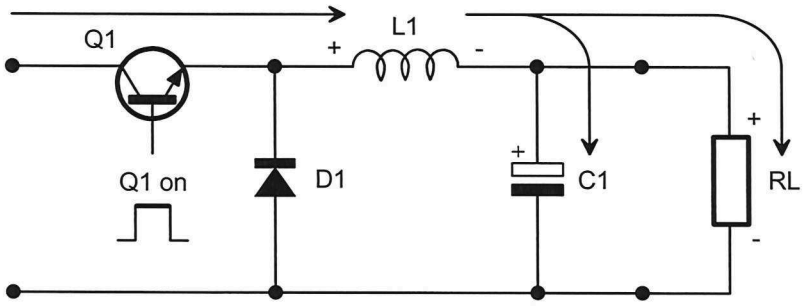

23.

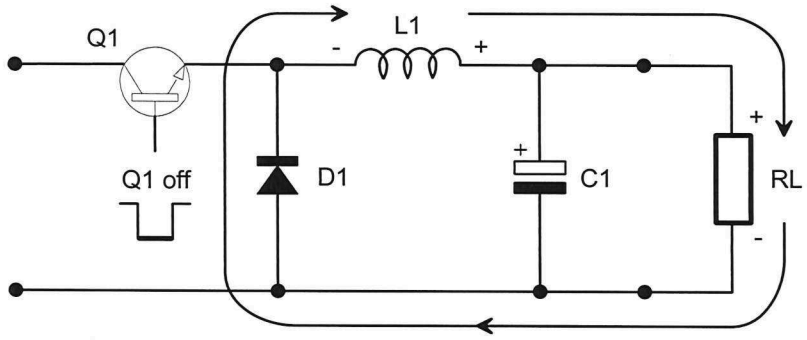

24. Inverting switching regulator

25. It can be either smaller or bigger than the input voltage and inverted.

 Copyright: Not to be reproduced without permission

Section 6 (continued)

26.

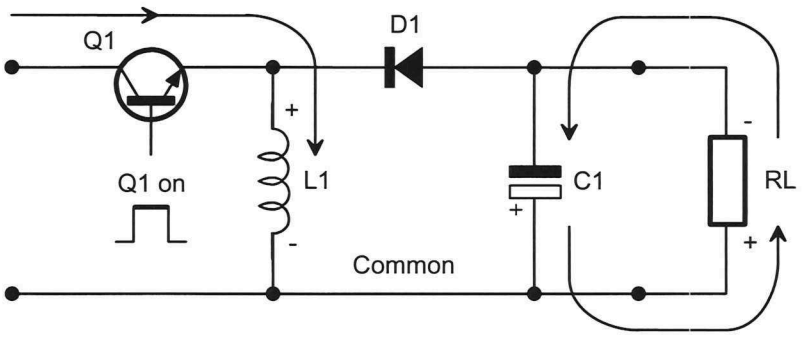

27.

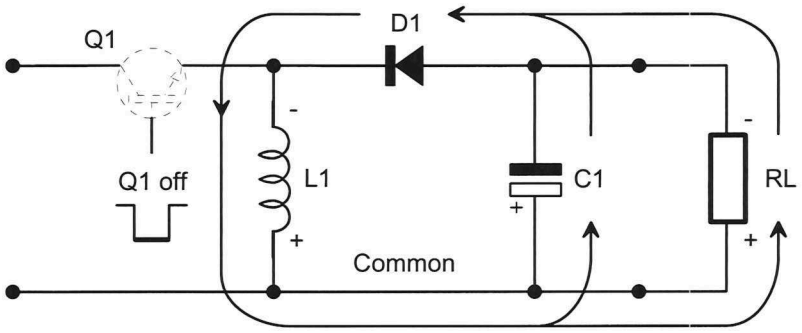

Section 7

1.

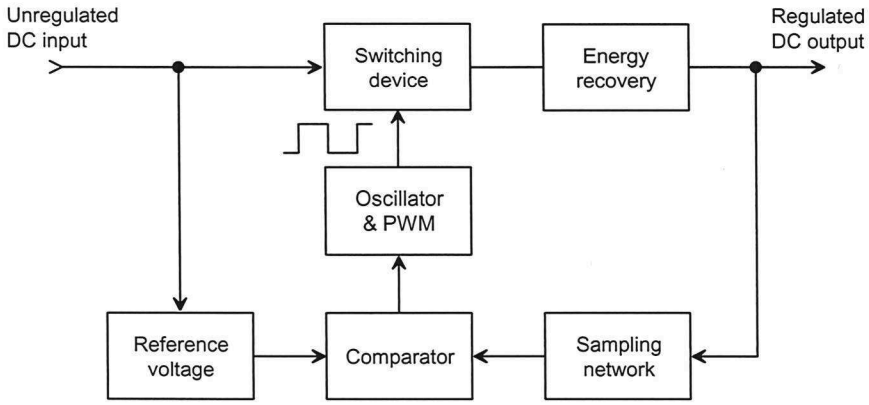

2. Step-up

3. $Vout = V_{REF} \times \frac{R2}{R3} + 1$ or $Vout = V_{REF} \times \frac{R2}{R2+R3}$

$Vout = 2.5V \times \frac{22k\Omega}{2k\Omega} + 1$

$Vout = 30V$

4. A squarewave with peaks at 30.6V and about 0.2V.

5. A bandgap voltage reference because 2.5V is a typical value for these devices whereas there are few (if any) zener diodes with a 2.5V rating.

6. Line regulation.

7. The output voltage would drop to zero because there would no-longer be a current path from the circuit's input to its output.

8. The output voltage would drop to 10V less the voltage drops across the diode and inductor because the transistor would no-longer switch and so the load simply becomes part of a series circuit with the inductor and diode.

9. The output voltage would drop to zero because the reference voltage is 0V.

10. Nothing, the circuit is regulated.

 Copyright: Not to be reproduced without permission

Section 7 (continued)

11. Step-down.

12. $Vout = V_{REF} \times \frac{R2}{R3} + 1$

    $Vout = 6.5V \times \frac{1k5\Omega}{1k2\Omega} + 1$

    $Vout = 14.63V$

13. A squarewave with peaks at about 19.8V and -0.6V.

14. Either a regular zener diode or a temperature compensated zener diode. Check the device's part number to see which type it is.

15. 3.56W

16. The output voltage would rise to maximum (which would be a little bit less than 20V) because the reference voltage would become 20V.

17. The output voltage would rise to a little less than 20V because the load simply becomes part of a series circuit with the inductor.

18. The output voltage would go down. There's two ways that this can be explained:

    First, as long as there is negative feedback, the potential difference across *R3* is constant regardless of its value. That being the case, if *R3* goes up in value, the current through it must go down and this in turn lowers the potential difference across *R2*. And, as the output voltage is the sum of the potential differences across *R2* and *R3* then it too must go down.

    Second, if you think of the circuit as a non-inverting amplifier, if *R3* goes down, the circuit's gain goes down and therefore so must its output voltage.

19. Indeterminate and floating. With *R1* open, the op amp's non-inverting pin would float. This effectively means that the reference voltage is indeterminate and floating and this has a corresponding effect on the output.

20. 15V

21. 90V

22. Because the output voltage could exceed the capacitor's voltage rating.

Section 8

1. Plug the equipment into mains via either: a GPO protected by an RCD or an isolation transformer.

2. To reduce your risk of being accidentally electrocuted.

3. Flyback converter and forward converter.

4. The transformer in the flyback converter is part of the energy recovery circuit and is designed to store energy. The transformer in the forward converter is used as a "chopper" and so does not store energy. Instead, it transfers energy from primary to secondary, much like a mains transformer in linear power supplies.

5. Forward converter.

6. $V_{AC(pk)} = Vin_{RMS} \times 1.414$

   $V_{AC(pk)} = 240V \times 1.414$

   $V_{AC(pk)} = 339.36V$

   $V_{C1} = V_{AC(pk)} - 1.2V$

   $V_{C1} = 339.36V - 1.2V$

   $V_{C1} = 338.16V$

7. Because mains is unregulated and can fluctuate over a wide range from as little as 205V and as much as 253V (for short durations).

8. The regulated DC output voltage can be lower than the circuit's unregulated DC input.
   The regulated DC output voltage can be higher than the circuit's unregulated DC input.
   The regulated DC output voltage can be the same as the circuit's unregulated DC input.

   So, the only incorrect answer to this question was "None of the above".

 Copyright: Not to be reproduced without permission

Section 8 (continued)

9.

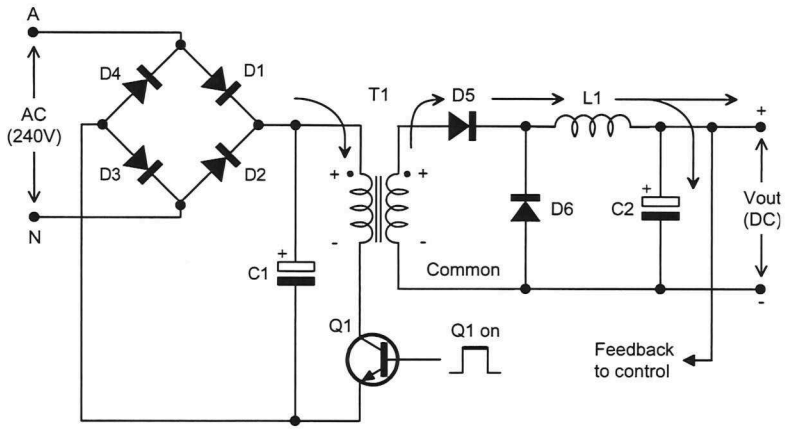

10.

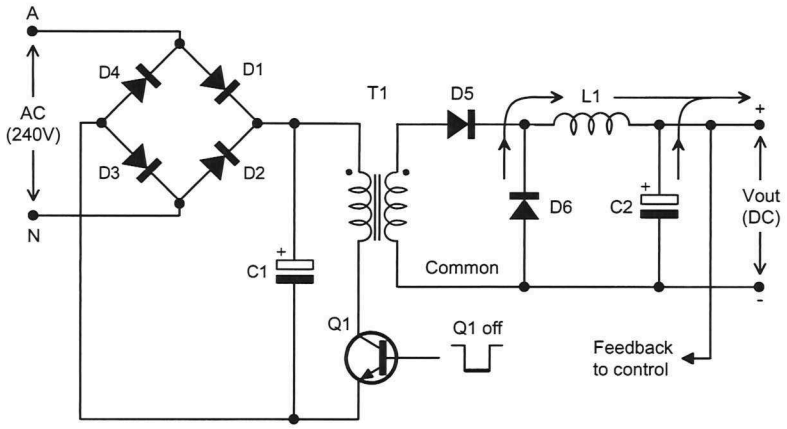

11. The effective DC output voltage would drop and it would contain a significant amount of ripple.

    Explanation: As *D6* is not forward biased when the switching transistor is on, the conditions around the circuit during this time would be normal and there would be current to the load and the filter capacitor. However, as *D6* is needed when the transistor is off, the operation of the circuit is different during this time. The energy recovery circuit would be disabled and so the inductor would be unable to deliver much if any of its stored energy to the load. This means the only current to the load would come from the filter capacitor (like a normal half-wave rectifier). The capacitor's value means that the current is highly unlikely to be sufficient for the load's needs and so the output voltage falls during this time.

12. The output voltage would drop to zero.

    Explanation: With the collector of the transistor open-circuit, there would never be any current through the transformer's primary. This means that energy would never be transferred to the secondary circuit and the load.

Section 8 (continued)

13. Off-line flyback converter.

14. The regulated DC output voltage can be lower than the circuit's unregulated DC input.
The regulated DC output voltage can be higher than the circuit's unregulated DC input.
The regulated DC output voltage can be the same as the circuit's unregulated DC input.

15.

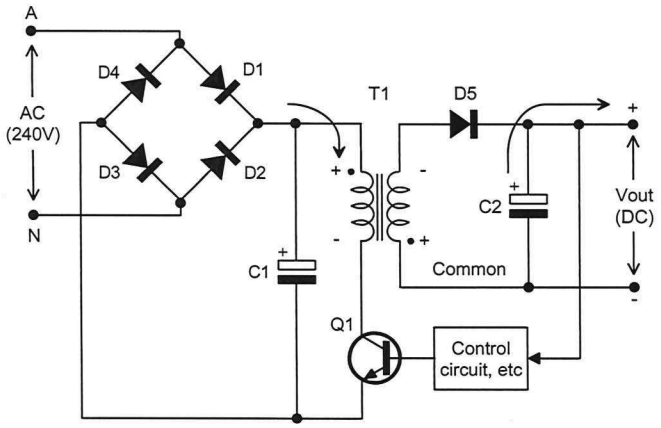

16.

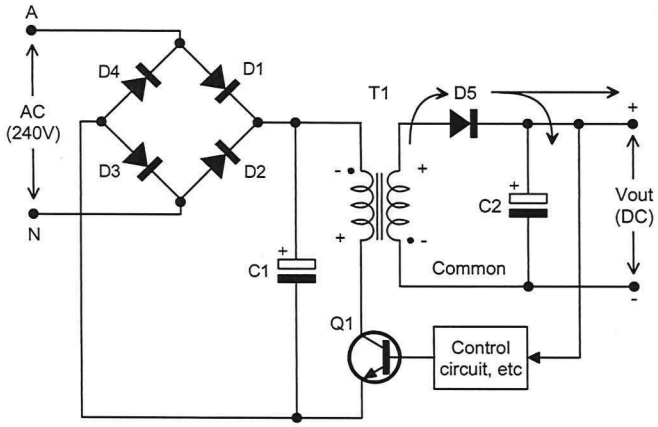

17. The output voltage would become an AC voltage that resembles the pulse train on the switching transistor's base.

Explanation: As *D5* is normally forward biased when the switching transistor is off, the conditions around the circuit during this time would be normal and there would be current to the load and the filter capacitor. When the switching transistor is on, the polarity across the secondary winding reverses but *D5* conducts current when it's supposed to be off. This means that current flows through the load (and the filter capacitor!) in the opposite direction.

 Copyright: Not to be reproduced without permission

Section 8 (continued)

18. The output voltage would drop to zero.

    Explanation: With the base-emiiter junction of the transistor short-circuit, it cannot turn on and conduct current via the collector and emitter. That being the case, there would never be any current through the transformer's primary. This means that energy would never be transferred to the secondary circuit and the load.

19. Forward converter.

20. A chopper.

21. Shunt regulator (to provide a regulated voltage for the *U1*).

    Clue: The junction between these two components is connected to the *Vcc* pin of *U1* so it must be providing regulation and not serving as a reference voltage in a closed-loop control system.

22. Voltage reference (to provide line regulation and help set the regulated DC output voltage).

    Clue: The junction between these two components is connect to the inverting pin of an op amp.

23. Schottky diodes (regular diode's will likely not cope with the circuit's switching speed).

24. To (indirectly) sense the output current and activate the current limiting if it becomes too great.

25. To limit the current through *D4*. (This resistor also sets the shunt regulator's maximum output current but it's unlikely being used for that purpose in this circuit.)

26. Bridge rectifier (to convert the AC to pulsating DC).

27. To smooth the pulsating DC out of the bridge rectifier.

28. Zener diode.

    Recall that a temperature compensated zener diode (or "reference diode") can be used instead of a regular zener diode but these typically have a zenering voltage starting at 6.2V so it's unlikely in this case. Recall also that bandgap voltage references can also be used instead of a zener but 3.9V is an unlikely voltage for one of these given they're not typically available with this voltage. Moreover, the schematic symbol for these devices has three terminals, not two.

Section 8 (continued)

29. Ferrite.

30. Toriod.

31. Better efficiency and lower levels of EMR.

32. To reduce the ESR of the filter capacitance to ensure that the capacitors can charge and discharge quickly enough to reduce the high frequency ripple on the power supply's output.

33. DC.

    Interestingly, this DC voltage would change in response to variations in load current; going up as the load draws more current and going down as it draws less. Can you figure out why? The answer has nothing to do with the operation of *U1* or *U2*.

34. Opto-coupler.

35. Provide electrical isolation from the low voltage circuitry to the high voltage circuitry via the feedback path.

36. To limit the current to the LED inside the opto-coupler.

37. Desaturation winding.

38. To prevent the core of *T1* from saturating (which would cause the chopper to underperform).

39. When *Q1* turns off.

40. Sample the output voltage.

41. Limit the current through D5

42. A pulse train (with a frequency anywhere from about 20kHz to 500kHz).

43. 10.3V

44. 13.8V

45. To manually set the output voltage to the correct value and then make fine adjustments to the voltage should it drift over time.

    Clues: The range out output voltages is fairly narrow. And, being a trimpot, it's not expected that the user of the equipment would need to change the power supply's output voltage. Trimpots, by definition, are used for fine adjustments.

 Copyright: Not to be reproduced without permission

Section 8 (continued)

46. No. (Although there's a fuse, this is a regular mains fuse.)

    Clue: The circuit must not have crowbar protection because there isn't a silicon controlled rectifier (SCR). That said, SCRs are used for other reasons not explained in this unit and so the presence of one wouldn't necessary prove that the circuit does have crowbar protection.

47. Any portion of the circuit in a SMPS that is said to be "hot" has, or can have under fault contions", a direct connection to the *active* of mains.

    Note: The "hot" of the circuit extremely dangerous to work on and so the SMPS must be power from a GPO that is RCD protected or plugged into an isolation transformer.

48.

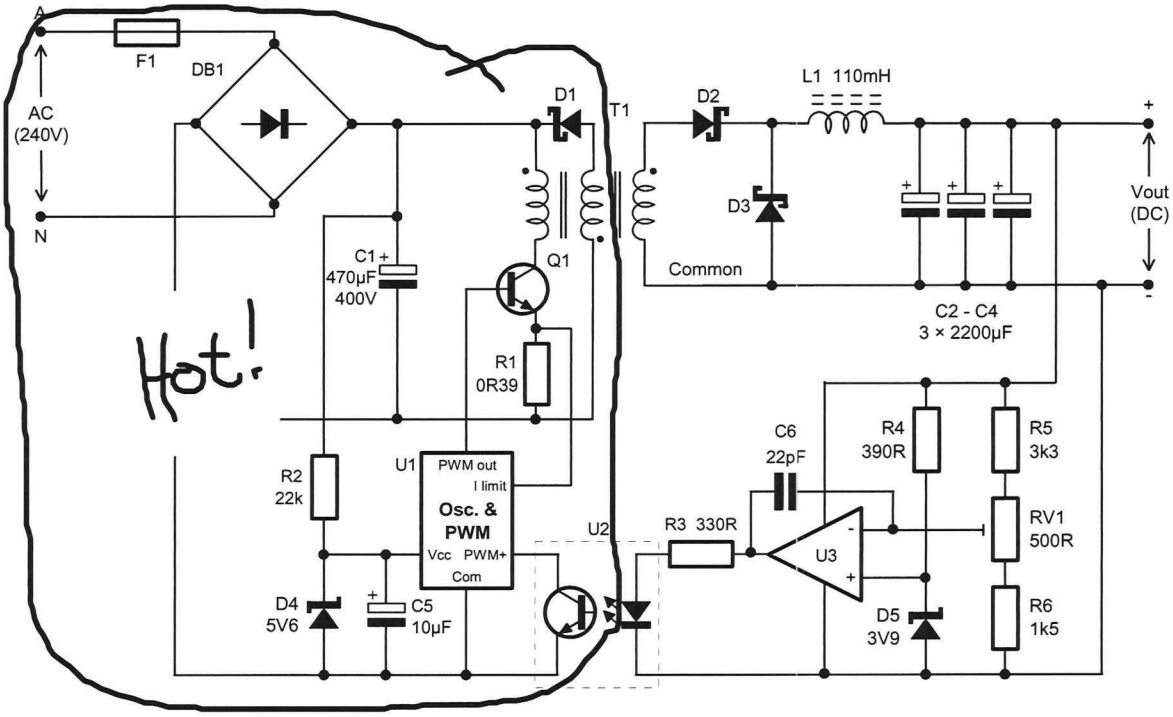

Section 8 (continued)

49. The output voltage would drop to zero.

    Explanation: The regulated DC output voltage is a multiple of the potential difference across *D5* (this "multiple is the circuit's closed-loop gain and is between 2.7 and 3.5 depending on the postion of the *RV1's* wiper). If *D5* is short-circuit, the potential difference across it is 0V and, as you know, any number multiplied by zero is zero.

50. The output voltage would rise to maximum (which would be a value determined by the turns ratio of *T1*).

    Explanation: The feedback circuit introduces negative feedback to the SMPS. As you may recall, negative feedback lowers the gain of a circuit which in turn lowers the circuit's output voltage for a given input voltage and load. If the LED goes open, the loop is broken, the circuit's gain rises to maximum and so does the output voltage.

51. The output voltage would drop to zero

    Explanation: With *D4* short-circuit, the voltage on the supply pin of *U1* would be 0V and so the IC wouldn't operate. This means that there would be no drive signal for *Q1* and, necessarily being 0V, *Q1* would be off. This means that there would be no energy transfer from the transformer's primary to its secondary and so there would be no output voltage.